BUILDING ANCHOR **TECHNOLOGY PRODUCTS**



UK Office Number: +44(203) 7699941

CHINA Office Number: +86(21) 66783185

TOPIN®







EVERYTHING
FOR
SAFETY

COMPANY PROFILE

TOPIN®

About TOPIN

Topin is a family owned company founded in 1956, headquartered in London, UK. Belonging to topin Industries in the UK, it is a flagship brand of building anchoring systems and prefabricated concrete connection solutions. This achievement stems from our professional technical experience and innovative spirit, as well as close cooperation with technical research institutions and universities.

Its production bases are distributed in the UK, Switzerland, Austria, and China. Our products mainly cover industries such as industry, nuclear power, energy, petrochemicals, construction, railways, etc. Providing professional solutions to global customers is the lifelong pursuit of all topin employees.

Over 70% of industrial factories, subway tunnels, and building pipelines in Europe are designed with prefabricated systems, and topin is one of the initiators of this concept. The unique galvanized surface anti-corrosion protection layer is a standard configuration for all series of carbon steel products, which can keep the products from being corroded for 50 years in dark and humid environments. Excellent building anchoring products are the basic guarantee for all structural forces, and the series of building anchor bolts, stone back bolts, and reinforcement planting bars provided by topin are the first choice for many high-quality customers. Ultra high-speed cutting products are excellent assistants for emergency rescue and engineering decoration, which can quickly remove obstacles in the shortest possible time, ensuring sufficient golden rescue time. The leading technological research and patent innovation one by one reflect topin's continuous promotion of industry development, dedication to safety, and high importance to life.

Topin adheres to the principle of "Everything For Safety", and is committed to Europe's mature technical experience and management model to help the construction industry improve quality and efficiency, transform and upgrade the Green Revolution. For more information, please visit: www.topingroup.uk





TOPIN:
VISION & POLICY

1

PARTNERSHIP

From Raw material procurement to comprehensive manufacturing products, TOPIN cooperates with foreign related companies to jointly produce a construction product can fit the customer's demand.

2

MATERIAL QUALITY

Our main raw materials are imported: 1.4571 stainless steel and S355J Low carbon alloy steel not only has excellent anti-corrosion performance, however gives TOPIN products strength and more flexibility for extreme environments, Ensure the safety in various structures.

3

OUR POLICY

Market is the direction, Quality is the purpose, Innovation is TOPIN soul.

4

LOGISTICS

TOPIN cooperates with multiple logistics companies, through multiple channels and Road transportation method to ensure to get the items in time.

5

PRODUCT QUALITY

TOPIN laboratory has professional testers responsible for monitoring each product, to ensure perfect quality of TOPIN products. Meanwhile, TOPIN R&D department continues to explore, innovate and developing new products, to meet construction site needs.

6

TECHNICAL SERVICE & TEAM WORK

Starting from the early design phase of the project, we cooperate with our customers engineering team, closely together to provide suitable solutions for the project. In case of any problem, Our Engineer's can be available on project site or office place.

TOPIN CATALOG

TOPIN®

TOPIN CHANNELS & T-BOLTS 6

TOPIN ANCHOR BOLTS 26

TOPIN UNDERCUT ANCHORS 41

PROJECT CASES.....63

TOPIN®

TOPIN CHANNELS & T-BOLTS



TOPIN
CURTAIN WALL

Modern building facades often use glass curtain walls; Therefore, traditional anchoring and connection methods are often difficult to meet the current requirements. TOPIN anchoring channel steel can match connectors for a flexible installation solution.

TOPIN connecting corner code are not a standardized product. Its custom made, to be Personalized solutions provided.

The supervision of the production process and finished products follows international modern standards. According to AQL program, various methods are adopted for different products, the most important that we keep the same quality for each product.

RELIABLE AND EFFICIENT PARTNERS

European technology and management

TOPIN integrates product R&D production, selling cutting-edge anchoring technology and internationally certified products in the construction industry to different parts of the world.

Experienced UK management and Chinese team control manage raw materials to keep high standard production.

Solutions for different application areas

TOPIN group product range covers building PC system, support system, peripheral curtain wall system and other widely selected related components. In addition, advanced R & D technology can meet the customized needs of many customers for non-standard solutions

Professional technical support

The technical departments in Europe and Asia provide customers with product technical support and application consulting. Regular product upgrading and the birth of new products all benefit from our continuous product R & D work. By using our latest product design software, you can easily choose an optimal product solution.

Quality and safety assurance of European certification

The enterprise internal quality management system formulated in accordance with EU standards ensures that all TOPIN products can maintain high quality level. Both the selection of suppliers and the continuous internal-external supervision measures effectively to reduce the occurrence of accidents.

1. TOPIN production base implements European standardized management system (DIN / ISO9001).
2. Monitor the product quality from time to time. Professional laboratory equipment and well-trained Test Engineer for internal inspection.



3. The formal licenses of all products are supervised and tested by the internal-external of TOPIN Team, also commissioned an independent third-party testing agency for inspection. For more information, please log in www.topingroup.uk

4. In addition, TOPIN has carried out technical cooperation with internationally renowned universities.

TOPIN group products R&D production, sales in one, the construction industry's cutting-edge anchorage technology and international certification products sold all over the world. We combine the advantages of European advanced engineering technology and Asia professional production. Our production base in Jiangsu, China, under the high standard control and management of European management, enables global customers to benefit from it. While enjoying cost-effective products, we can also obtain safe and reliable solutions brought by high-end products.

Reliable and efficient partner

The growth of TOPIN is from the continuous improvement of quality and the good positioning in market place. Its high-quality service, rich product categories and supply capacity have been praised by customers.

The flexibility of the whole team can quickly meet the different needs of customers.

Innovative product reform makes our cooperation with our customers much more closer.



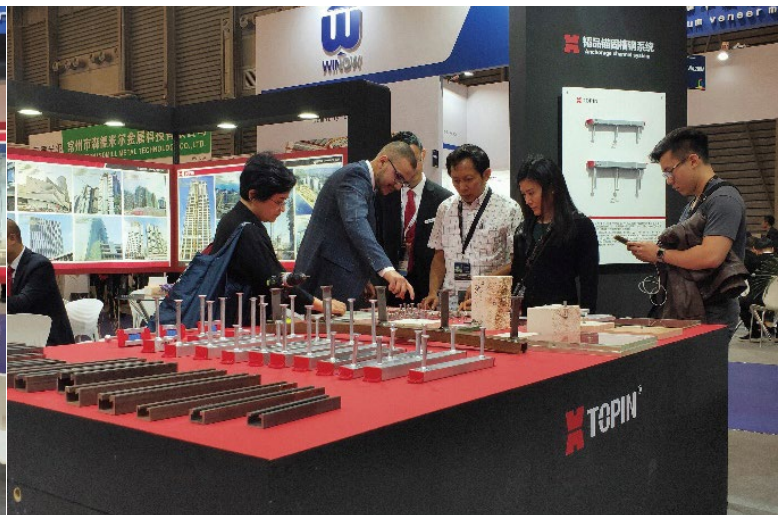

The growth of TOPIN products is attributed to the continuous improvement of quality, But also the reasonable positioning of the market, high-quality service, various product and supply capacity. The flexibility of the entire team can quickly meet the diverse needs of customers.

Innovative product led increasingly close cooperation for TOPIN customers around the world. In addition, customers can also rely on the supply channels that we have established in Asia to carry out their business Sourcing strategy in the Asian region.

QUALITY ASSURANCE

ANCHOR CHANNEL STEEL AND BOLTS



TOPIN anchoring channel steel is an ideal choice for installing and fixing various components. TOPIN channel steel has the European technical certification ETA and CABR testing certification of Asian National Construction Engineering Quality Supervision and Inspection Center.
TOPIN not only produces anchoring channel steel, but also has a complete range of other accessories, making it suitable for use in multiple application fields.

The filler we use has a special design shape, can effectively prevent the concrete from entering the channel steel, the filler in the channel steel can be easily removed with the help of the tear bar under the foam. The use of organic materials as fillers will not cause pollution to the construction site even when be removed. Tearing the pull strip can also remove all remaining fillers.

The comprehensive quality management system has the European standards, to ensures the best work results.
From the selection of suppliers, internal or external audit processes, to strict control of each production step, the entire production process leaves no gaps, thus ensuring product quality.

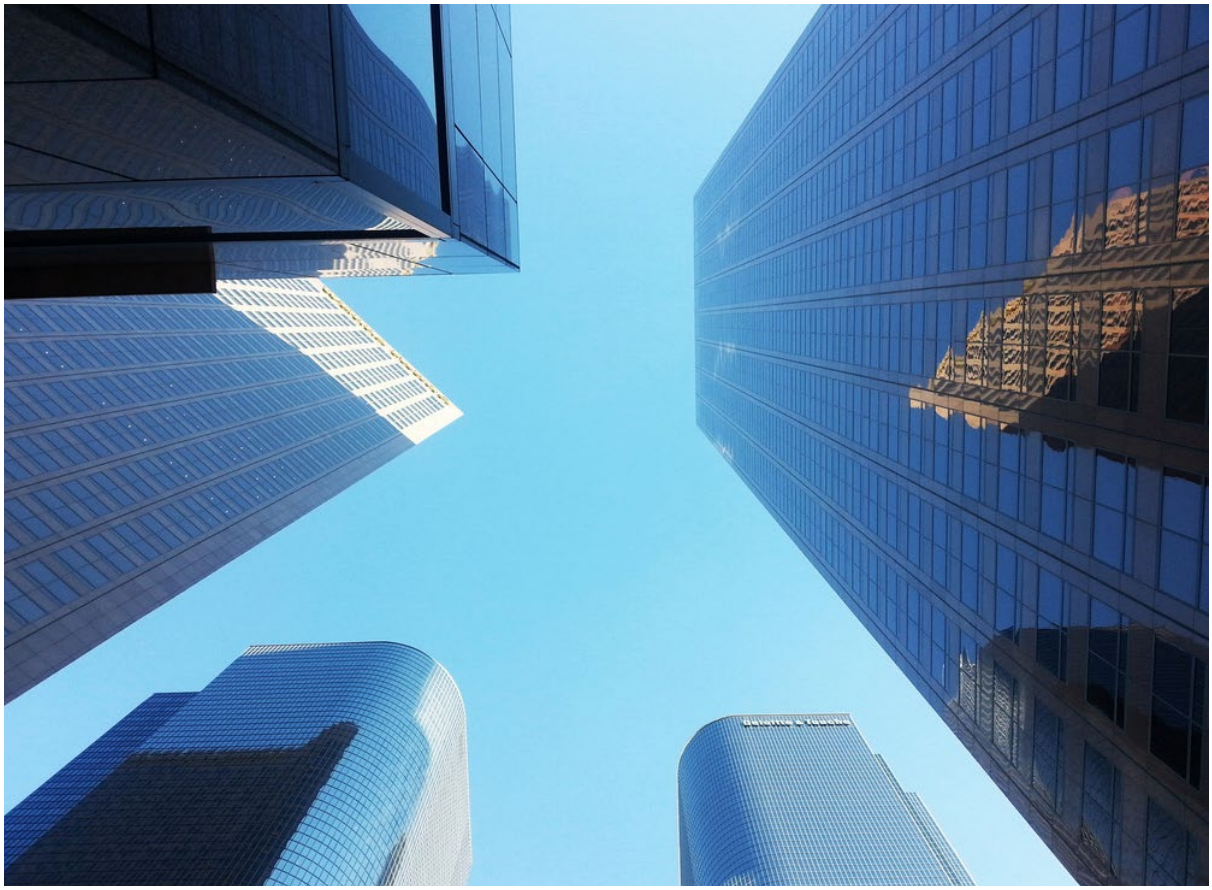

TOPIN engineers are committed to develop technologically mature product solutions.

TOPIN Software Design calculation, Goodway is a simple and easy-to-use GUI (graphical user interface) for design and software calculation. It can help you optimize the selection of our products and design methods.

In addition to quasi design, our focus is on providing solutions for various application areas.

Design calculation standards to develop customized unique product solutions.

Easy, safe, and low-cost

By using TOPIN anchoring channel steel, it is possible to achieve an economical and reliable anchoring in a short period of time for Connection scheme. Using TOPIN products, especially in the early design stage can greatly shorten the construction time, as it TOPIN anchoring channel steel is connected and fixed through screws bolt, does not require welding or drilling.

QUALITY ASSURANCE

The growth of TOPIN products is attributed to the continuous improvement of quality and the reasonable positioning of the market, good service, rich product variety, and supply capacity have all won customers Praise. The flexibility of the entire team can quickly meet the diverse needs of customer's demand. Innovative product reforms have led to increasingly close cooperation between customers and TOPIN. In addition, customers can also rely on the supply channels we have established in China to carry out their business Sourcing strategy in the Asian region.





Hot rolled Channel

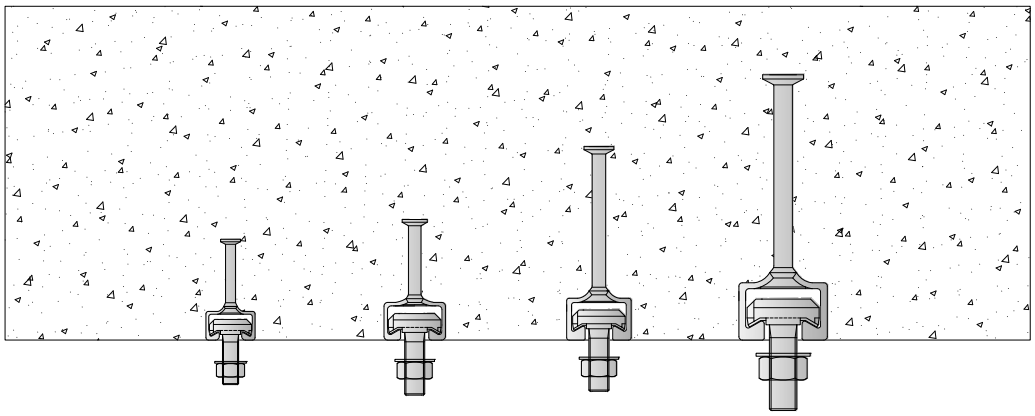

40-22 50-30 52-34 72-48

Toothed Channel

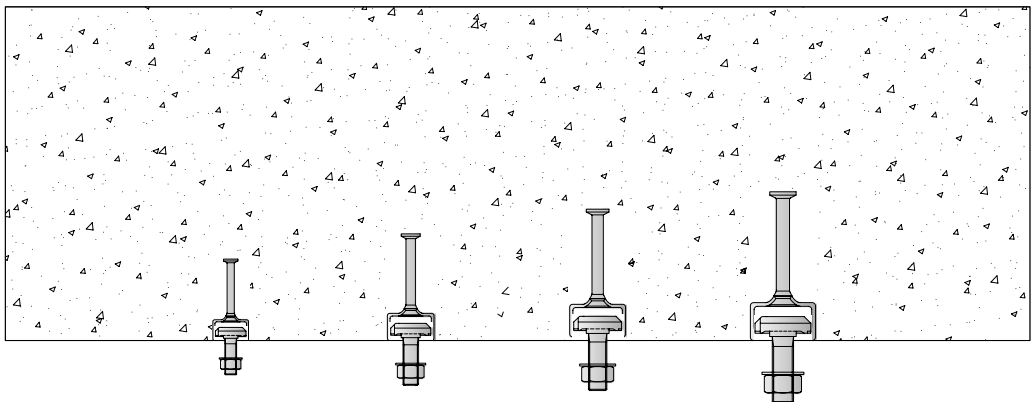

29-20 38-23 41-26 53-34

TOPIN Channels



Channels Categories: Toothed & Non-Toothed

Category	Profile	length	Width	Height	Open size	Hef min	C min	T-Bolt Type		No.,
								Bolt type	Thread range	
	[mm]	[mm]	[mm]	[mm]	[mm]	[mm]	[mm]	[mm]	[mm]	
Toothed	ACC-TE 29/20 CBS	300	30	20	14.0	80	50	SR-29/20	M6-M12	600 001 011
	ACC-TE 29/20 CBS	350	30	20	14.0	80	50	SR-29/20	M6-M12	600 001 012
	ACC-TE 38/23 CBS	300	38	23	18.0	95	70	SR-38/23	M12, M16	600 001 013
	ACC-TE 38/23 CBS	350	38	23	18.0	95	70	SR-38/23	M12, M16	600 001 014
	ACC-TE 38/23 CBS	400	38	23	18.0	95	70	SR-38/23	M12, M16	600 001 015
	ACC-TE 41/26 CBS	300	41	26	18.0	150	70	SR-41/26	M12, M16	600 001 030
	ACC-TE 41/26 CBS	350	41	26	18.0	150	70	SR-41/26	M12, M16	600 001 031
	ACC-TE 41/26 CBS	400	41	26	18.0	150	100	SR-41/26	M12, M16	600 001 032
	ACC-TE 53/34 CBS	300	53	34	22.0	155	100	SR-53/34	M16, M20	600 001 016
	ACC-TE 53/34 CBS	350	53	34	22.0	155	100	SR-53/34	M16, M20	600 001 017
	ACC-TE 53/34 CBS	400	53	34	22.0	155	50	SR-53/34	M16, M20	600 001 018
Non-Toothed	ACC-TA 40/22 ADW	300	40	22	18.0	79	50	T-40/22	M12-M16	600 001 019
	ACC-TA 40/22 ADW	350	40	22	18.0	79	75	T-40/22	M12-M16	600 001 020
	ACC-TA 50/30 ADW	300	50	30	21.0	94	75	T-50/30	M12-M20	600 001 021
	ACC-TA 50/30 ADW	350	50	30	21.0	94	75	T-50/30	M12-M20	600 001 022
	ACC-TA 50/30 ADW	400	50	30	21.0	94	100	T-50/30	M12-M20	600 001 023
	ACC-TA 52/34 ADW	300	52	34	22.0	155	100	T-50/30	M12-M20	600 001 024
	ACC-TA 52/34 ADW	350	52	34	22.0	155	100	T-50/30	M12-M20	600 001 025
	ACC-TA 52/34 ADW	400	52	34	22.0	155	150	T-52/34	M12-M20	600 001 026
	ACC-TA 72/48 ADW	300	72	48	33.0	178	150	T-72/48	M20-M30	600 001 027
	ACC-TA 72/48 ADW	350	72	48	33.0	178	150	T-72/48	M20-M30	600 001 028
	ACC-TA 72/48 ADW	400	72	48	33.0	178		T-72/48	M20-M30	600 001 029

Anchors Positioning with Length Variations (mm) :

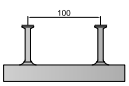

150

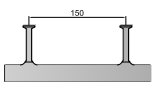

200



250

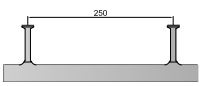

300

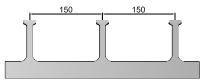

350

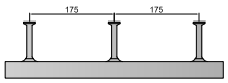

400

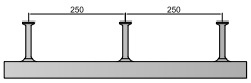

550

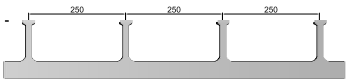

800

Anchor Head

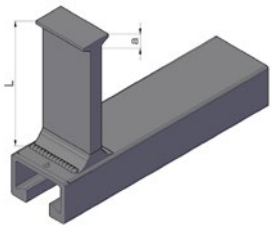
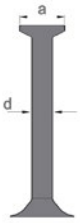

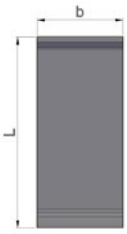

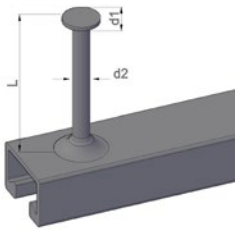

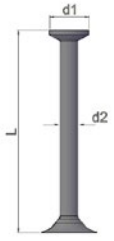

Channel profile	Nail-Anchor [mm]			I- Anchor [mm]			
	L	d1	d2	L	a	b	d
TOPIN-ACC-TE 29/20 CBS	60	16	8				
TOPIN-ACC-TE 38/23 CBS	76	20	10				
TOPIN-ACC-TE 41/26 CBS	124	24	11				
TOPIN-ACC-TA 40/22 ADW	57(75)	16	8				
TOPIN-ACC-TA 50/30 ADW	64(76)	20	10				
TOPIN-ACC-TA 52/34 ADW	122	24	11	125	20	40	5
TOPIN-ACC-TE 53/34 CBS	122	24	11	125	20	40	5
TOPIN-ACC-TA 72/48 ADW				140	20	40	7.1

Embedded Channel Categories

Categories		ACC-TA 40/22	ACC-TA 50/30	ACC-TA 52/34		ACC-TE 29/20	ACC-TE 38/23	ACC-TE 41/26	ACC-TE 53/34
T-Blots	Toothed	40/22	50/30	50/30	Non-Toothed	29/20	38/23	41/26	53/34
Thread		M12-M16	M12-M20	M12-M20		T-M10-M12	T-M12-M16	T-M12-M16	T-M16-M20
N(kN)		11.11	20.00	30.56		16.10	18.89	38.91	30.56
V(kN)		14.44	27.78	39.72		18.25	27.78	35.06	39.44
Vx(kN)		6.89	15.56	16.72		15.27	16.72	16.11	30.56
hef(mm)		79 (98)	94 (104)	155		80	95	150	155
bch(mm)		40	50	52		29	38	41	53
hch(mm)		22	30	34		20	23	26	34
Cmin(mm)		50	75	100		50	70	70	100
Smin(mm)		100	100	100		100	100	100	100
x(mm)		25	25	35		25	25	35	35

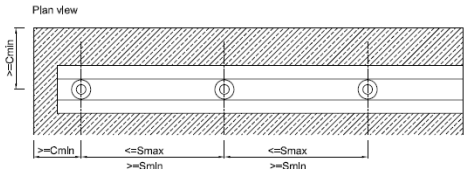

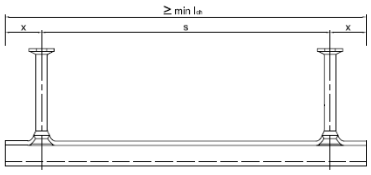

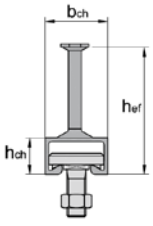

SPECIAL USE CONDITION

Channels Type	Technical Title	Product Advantages	Applicable Conditions
	TOPIN-V Channel	Multi-angle welding, combine different lengths and anchorage depths of channel steels.	Structural corners can be modified in different angles.
	TOPIN-BC Channel	Different thickness of concrete design a variety of buried Deep products; plate thickness and channel steel form diversity.	Suitable for heavy load conditions of thin-walled concrete.
	TOPIN-Double Channel	Based on requirements of the distance between two channel steel, The factory is customized to reduce on-site welding; it perfectly matches the aperture size of the conversion part.	The location where double slots need to be arranged.
	TOPIN-T Channel	About concrete thickness, Custom buried depth; unique thickened design of the rivet foot can be welded with the steel beam during construction.	It is necessary to weld the rivet and the steel beam to increase the strength performance of the buried groove.
	TOPIN-U Bar Channel	Conventional groove buried and lateral steel welded bodies can help concrete meet larger shear joints.	Suitable for thin-walled concrete structures and high shear performance requirements.
	TOPIN-HP Channel	The aggregate of channel steel and steel plate embedded parts, both to ensure the adjustability of the channel steel.	Concrete structure channel.

Materials

TOPIN produt	Steel		Stainless steel	
Profiles	S235JR=1.0038 S355JR=1.0045	EN10025-2	1.4301/1.4541(A2) 1.4401/1.4404/1.4571(A4) 1.4529/1.4547	EN10088
Anchors	S235JR=1.0038	EN10025 EN10263	1.4401/1.4404/1.4571(A4) 1.4529/1.4547	EN10088
T-Bolts	Strength class 8.8	EN ISO 898-1	A4-50; A4-70; FA-70	EN ISO 3506-1
Hexagon nuts	Strength class 8.8	EN 20898-2	A4-50; A4-70; FA-70	EN ISO 3506-2
Washers	Strength class 4.8	EN ISO 7089 EN ISO 7093-1	1.4401/1.4404/1.4571(A4)	EN10088

Certifications and Tests Reports

Channel installation design

Channels	Minimum distances and minimum element dimensions(mm)						
	Single channels					Channel pair	
	a_r	a_a	a_e	a_f	b	a_{r1}	a_{a1}
TOPIN-ACC-TE 29/20 CBS	50	100	40	80	100	50	100
TOPIN-ACC-TE 38/23 CBS	75	150	50	100	150	100	100
TOPIN-ACC-TA 40/22 ADW	100	200	70	200	200	140	150
TOPIN-ACC-TE 41/26 CBS	75	150	50	100	150	100	100
TOPIN-ACC-TA 50/30 ADW	150	300	100	250	300	225	150
TOPIN-ACC-TA 52/34 ADW	200	400	175	350	400	-	-
TOPIN-ACC-TE 53/34 CBS	200	400	175	350	400	-	-
TOPIN-ACC-TA 72/48 ADW	250	500	225	450	500	-	-

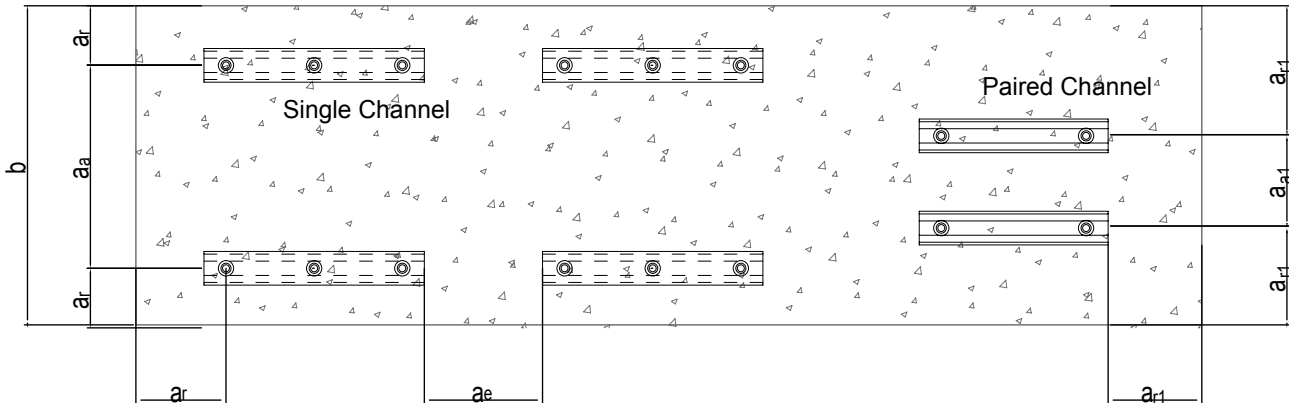

TOPIN Anchorage Channel Steel System



Due to the influence of construction Progress, especially curtain Wall construction, there are a large number of situations that need to be added later or missed and pre-embedded. In order to improve the installation accuracy and speed of the curtain wall supplementary construction, TOPIN launched the supplementary channel steel system to easily solve the curtain wall supplementary process dry hanging problem.

1. Advantages

• High fatigue resistance;
• Durability: long maintenance intervals, easy disassembly and maintenance;
• Hot-dip galvanized or stainless-steel surface treatment, anti-corrosion;
• Components with higher load capacity for small margins and cracked/non-cracked concrete with less deformation;

2. Disadvantages

• Increased end-user cost and time efficiencies;
• After installation, Bolt position can be flexibly adjusted, and the structural deviation can be a bit difficult to adjust;
• Avoiding Welding construction.

3. References

Reference	tensile design value [kN]	Shear design value [kN]	Anti-slip design value [kN]
T-Bolt: TOPIN-PIN M10x60 Channel: TOPIN-ACC-TE 38/23	23.40	32.07	18.87

4. Installation Method

• According to design 2-3 undercut anchor bolts with internal threads, can be installed into the concrete after drilling and reaming;
• Depend on the type of channel steel the force of the hexagonal bolts can be connected the internal thread anchor bolts to the channel steel;
• Connected anchors plate and channel steel by T-bolts (optimize T-bolt spacing, reduce anchor plate size as much as possible).

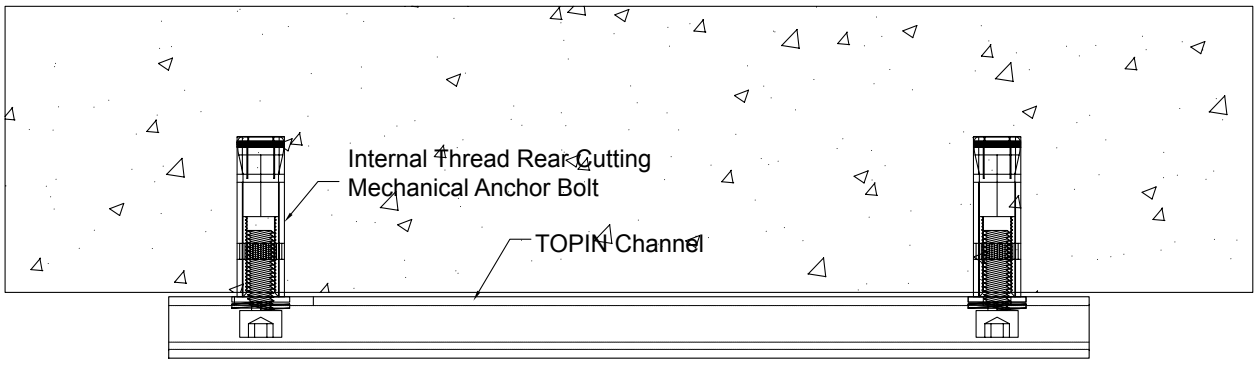

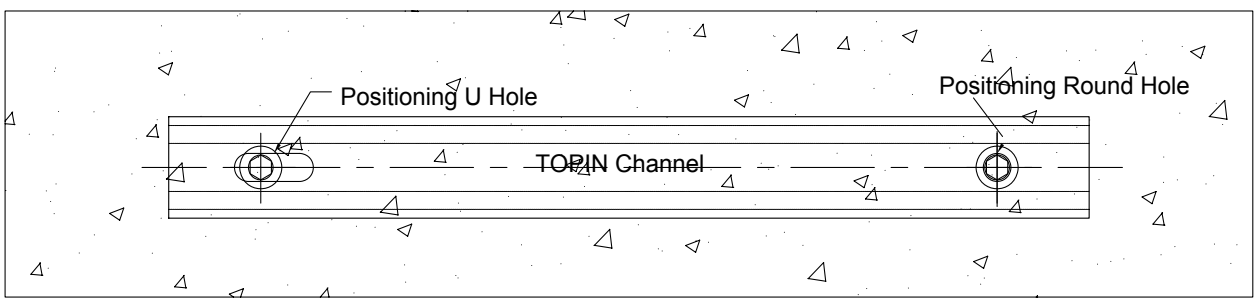

Channels: Railway and Subway Industry

Railway Industry

1. TOPIN-TE-I-53/34 Embedded Channel

The Best choice of high-speed railway catenary fixing

TOPIN-TE-I-53/34 Groove embedded parts can be customized according to the needs of railway engineering projects, especially used in the concrete structure of high-speed railway tunnel, for post-equipment fixation. TOPIN Quality trough embedded system and comprehensive supporting services, Providing Safety for Railway Engineering, long-term performance, meet the requirements of a hundred-years life service of railway engineering.

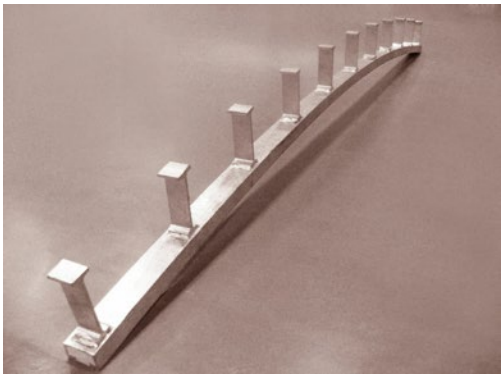



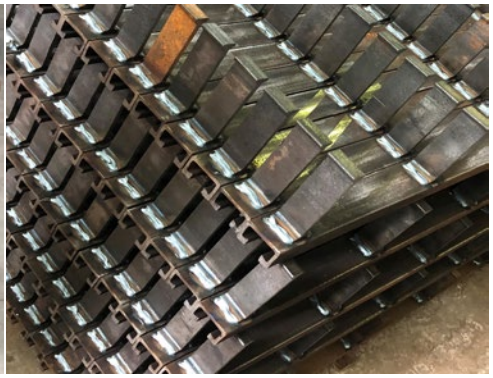

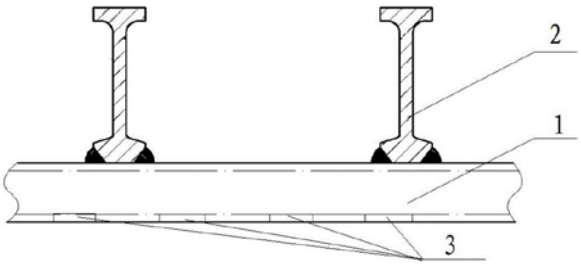



1-Custom maid designed for catenary installation in railway tunnels.

2-The length and radius of curvature can be customized to meet different needs.

3-Anchor legs fully enclosed and welded on all sides, to avoid the acid residue in the pickling process from continuing to corrode the channel in the gap.

4-Hot-dip galvanized above 80um is treated with a sealing layer, excellent corrosion resistance.

5-Excellent fatigue resistance.

6-High fire resistance (Passed RABT-ZTV)

7-Toughness, with easy-to-tear padding to avoid slurry leakage, slightly easy to remove.

2.Product Use:

(1) Catenary equipment fixed in high-speed railway tunnel.
(2) Electromechanical installation in high-speed railway tunnels.
(3) Heavy pre-embedded fixings for high-speed railways.

3.Technical Parameter

Embedded Channel:
Steel Grade: Q355B.
Size (width & height): 53mm x 34mm (buried depth 155mm).
Design Value of Tensile Force: 30.56kN.
Design Values of Shear Force in (Y & X) Directions: 39.44kN, 30.56kN.

4.T-BOLT:

M16 & M20 Tensile Design Value: ≥ 37.20kN.
Design Value of M16 & M20 Shear Force: ≥ 50.24kN.
M16 & M20 Anti Slip Design Value: 30.56kN.

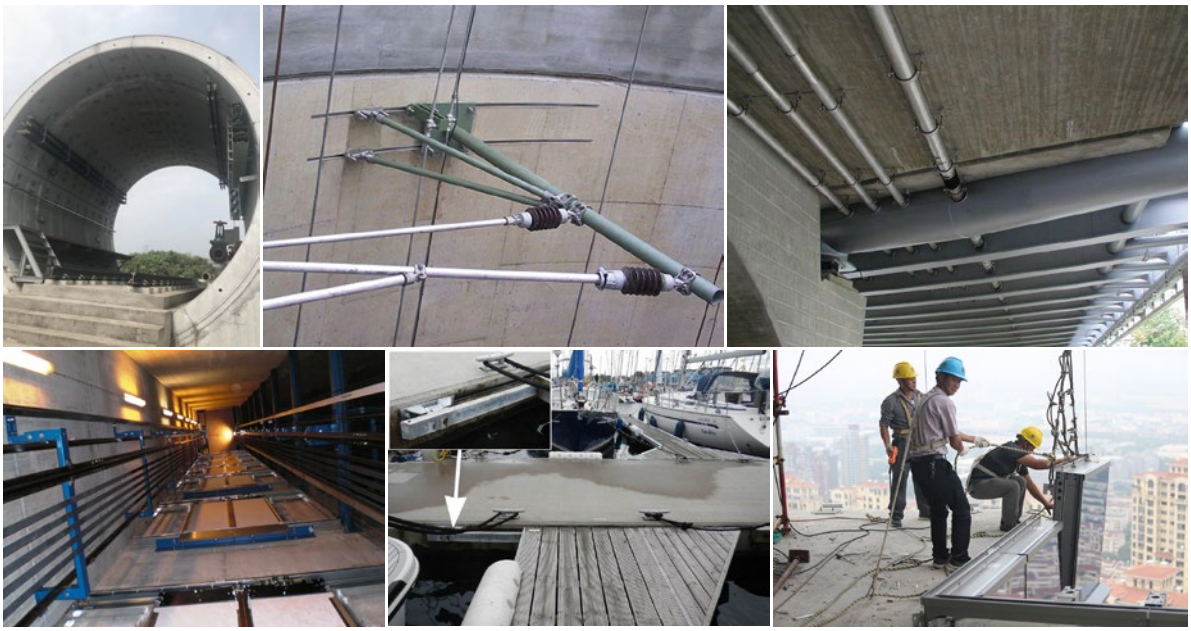

Metro industry

TOPIN-TE Toothed edge embedded groove can be customized in length and curvature according to customer requirements, also can be embedded into various subway concrete structures for later equipment fixation.
TOPIN high-quality embedded groove system and comprehensive supporting services provide safe and reliable long-term performance, guarantee for subway engineering, meeting the requirement of a hundred-year service life of subway engineering.

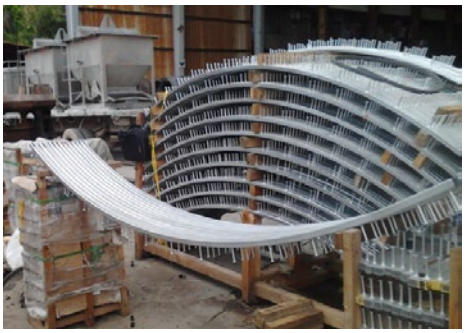

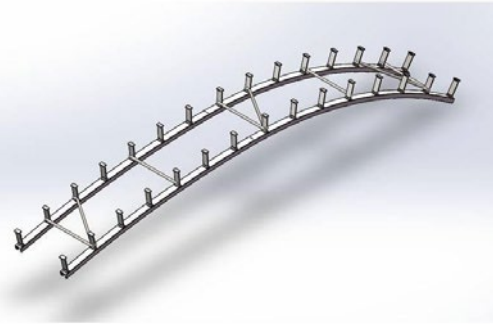



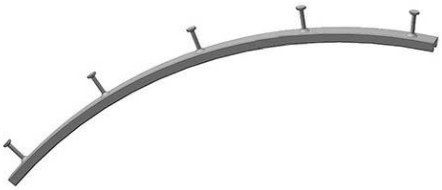

1.Characteristics of TOPIN Channels:

• Continuous triangular teeth, resistant to axial shear force.
• The product can be customized in length and curvature radius, to meet the usage needs of different shield tunnel diameters.
• Excellent fatigue resistance and fire resistance bearing capacity.
• Excellent corrosion resistance.

2.Use Method:

• Anchorage of equipment in subway shield tunneling section.
• Anchorage of equipment in subway mining sections .
• Anchorage of subway cast-in-place station equipment.
• Anchorage of U-shaped measuring equipment in rail transit.
• Metal Material Inspection Report for Embedded Channel.
• Test Report on Weld Grade of Embedded Channel.

4. Performance requirements

(1) Value Design of bearing capacity

Reference	Tensile design value [kN]	Shear force Y [kN]	Shear force X Design value [kN]
TOPIN-ACC-TE-29/20	11.20	11.20	11.20
TOPIN-ACC-TE-38/23	18.89	27.78	16.72
TOPIN-ACC-TE-41/26	38.91	35.06	16.11

(2) Applicable substrates and materials:Cracked concrete:C30-C60 ;Materiel Q355B

(3)T-Bolts include M8. M10. M12. M16

(4) The selected coating does not contain carcinogen, For example: Cr6+

(5) Usage and storage: Each batch uses independent pallets, with buffer partitions between each layer of embedded slots. Please store in a cool and dry indoor Warehouse.

(6) Table

Reference	Width [mm]	Height [mm]	Notch width [mm]	Diamter [mm]	Depth [mm]	Minimum radius [mm]
TOPIN-ACC-TE-29/20	29	20	14	8	80	500
TOPIN-ACC-TE-38/23	38	23	18	10	95	500
TOPIN-ACC-TE-41/26	41	26	18	11	150	500

5. Installation Method







T-Bolt

T ABB Bolt

Material:

Bolts: carbon steel, standard DIN EN ISO 898-1

Nut: carbon steel, executive standard DIN EN ISO 898-2

Gasket: mild steel, standard DIN 125B

Surface treatment: hot dip galvanized,HDG ≥ 40um

DIN 1.4401(A4-70)



Technical Parameters :

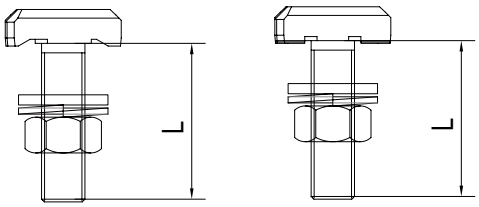

T-Bolts Channel bolt/ Steel failure				M12	M16	M20	M24
Characteristic tension resistance	N_{Rks}	[kN]	8.8	67.40	125.60	196.00	282.40
			A4-70	59.00	109.90	171.50	247.10
Safety factor	γ_{Ms}	[-]	8.8	1.50			
			A4-70	1.87			
Characteristic shear conecters	V_{Rks}	[kN]	8.8	33.70	62.80	98.00	141.00
			A4-70	35.40	65.90	102.90	148.30
Safety factor	γ_{Ms}	[-]	8.8	1.25			
			A4-70	1.56			
Characteristic flexural resistance"	M^0_{Rks}	[Nm]	8.8	105.00	266.00	519.00	898.00
			A4-70	92.00	233.00	454.00	786.00

T-Bolt installation torque

Reference	29/20 [Nm]	38/23 [Nm]	41/26 [Nm]	53/34 [Nm]	40/22 [Nm]	50/30 [Nm]	52/34 [Nm]	72/48 [Nm]
M10					15	15	15	
M12	75	75	75		45	45	25	
M16		185	185	185	100/160	100/185	60	360
M20				360		360/320	120	625

Bolt Length Range

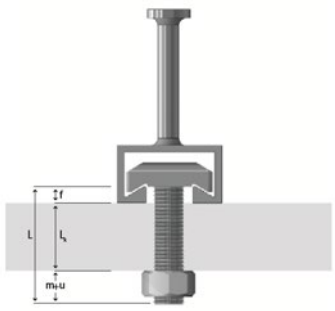

L	Bolt Length
L_k	Thickness of connection part
f	Channel steel thickness
m	Nut Height
n	Bolt Overlap
Max screw length in mm:	$L= L_k+f+(m+n)$

Bolt	M6	M8	M10	M12	M16	M20
m+u [mm]	8.8	11.3	13.9	17.3	21.8	27.0

TOPIN®

TOPIN ANCHOR BOLTS

TOPIN-TUA INTENSE CHEMICAL TUBE

Product Description :

The chemical tube (Silicon Dioxide), with high intensity tube chemical adhesive consist of polystyrene, vinyl resin, arenaceous quartz and curing agent, used together with metal anchor, TUA is new anchoring materiel that can replace anchorage steel channel and Bolt expansion.



Product Advantages:

- High-Loading, Small Space and Narrow Distance.
- No Expansion Stress, allow smaller side-distance.
- Drill the hole in “seal airtight” after assembly.
- Flame Retardant, Burn-Resistant Welding, good performance in Anti-Seismic, No Creep in Normal Temperature.
- Vinyl resin with good feature of anti-aging and stable loading in humid environment.
- Glass Tube is crystal of Silicon dioxide, can fit well with concrete.
- Anti-fire, good adhesive performance in F30, F60, F90, F120.

Use Method:

- Anchor bolt can be used for standard concrete and reinforced concrete with a minimum strength grade of C20/C25 with maximum strength grade of C50/C60.
- Can be used for non-cracking concrete.
- Enable the anchor bolt to be anchored under static loads (such as self-weight, installation, support).
- The temperature used in mortar can reach+50 degrees, with max +80 degrees in a short period of time.
- Can be used in natural stone materials that withstand pressure.
- Suitable for fixing steel keels, supports, hangers, footings, crossbeams, curtain walls, and fixation equipment.

Use Method:

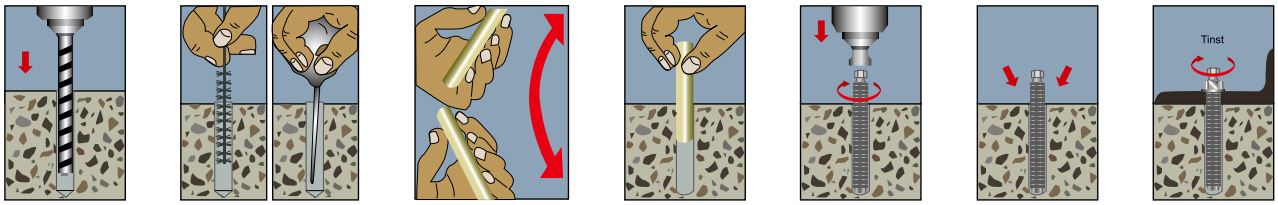

A. Drilling a hole.

B. Removing dust from the hole, blowing, brushing, again blowing, and then brushing.

C. Inspect the chemical tube for any damage or defects, check if the resin can flow.

D. Install the chemical tube into the hole, by keeping the bubbles in the tube on the side of the borehole as much as possible.

E. Adjust the electric drill to the hammering rotation gear (speed 250-750rmp), drive the screw into the marking line by rotating the fixture.

N: Strictly prohibited to use only hammering for installation and rotate for a long-time during installation.

°C	-14- -10	-9- -5	-4- +0	+1- +5	+6- +10	+11- +20	+21- +30	+31- +40
	30h	16h	10h	45 min	30 min	20 min	5 min	3 min

TOPIN-TUA

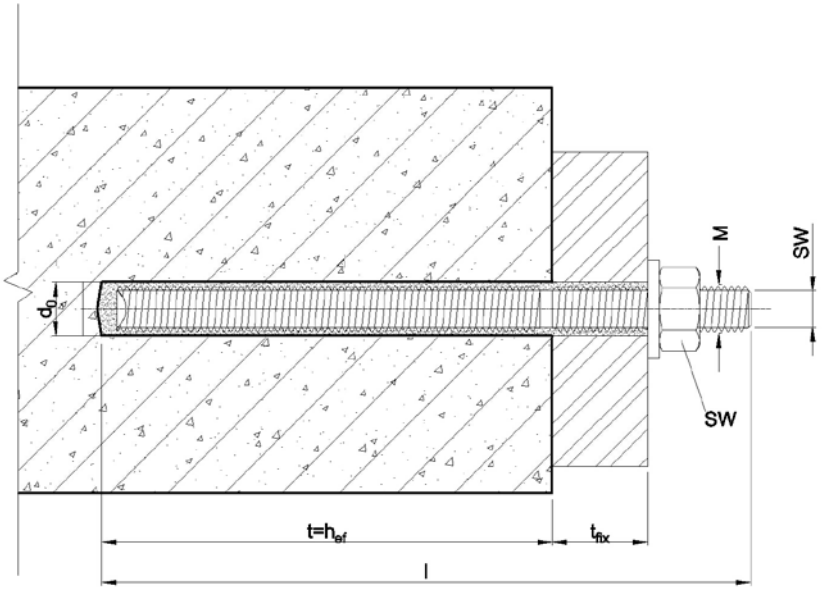

Product characteristics								
Anchor bolt diameter		mm	M8	M10	M12	M16	M20	M24
Minimum spacing		Smin(mm)	40	45	55	65	85	105
Minimum margin		Cmin(mm)	40	45	55	65	85	105
Minimum thickness of substrate		hmin(mm)	110	120	140	160	220	260
Drill depth		ho(mm)	80	90	110	125	170	210
Drill Head diameter		do(mm)	10	12	14	18	25	28
Drilling diameter		dcut≤(mm)	10.5	12.5	14.5	18.5	25.5	28.5
Anchor plate opening diameter		df≤(mm)	9	12	14	18	22	26
Anchor bolt installation torque		Tinst=(Nm)	10	20	40	80	120	180
Brush diameter		D(mm)	10.8	13	15	19	27	29
Hole cleaning requirements M8-M24 1* Blow、1* Brush、1* Blow、1* Brush								
Parameter Performance								
TUA Chemical package, T-TUA/S Carbon steel screw								
Tensile design value	Non cracking concrete C20/C25	Nrd(KN)	15.50	25.85	35.55	38.4	68.5	90.3
Design value of shear force	Cracked concrete C20/C25	Vrd(KN)	17.50	13.70	29.91	28.5	45.4	68.0
TUA Chemical package, T-TUA/A4 stainless steel screw								
Tensile design value	Non cracking concrete C20/C25	Nrd(KN)	18.97	27.85	37.85	40.3	74.6	92.6
Design value of shear force	Cracked concrete C20/C25	Vrd(KN)	19.42	15.50	30.50	31.6	49.0	70.7

TOPIN-TUA

Anchor Bolt: Carbon Steel 5.8 Grade.
Electroplated Zinc Coating: Thickness up to 5μm, Hot-dip galvanization thickness Above 30 μm.
High strength rubber hose: Chemical bonding anchor bolt T-TUA/A4 stainless steel A4 (1.4401).

References (mm)	Length (mm)	Max Anchor Fixed Range (mm)	Carbon steel screw T-TUA/S	Product Ref. No. T-TUA/S	Stainless Steel Screw T-TUA/A4	Product No. T-TUA/A4	Chemical adhesive hose T-TUA	Product No. T-TUA
M8	110	20	T-TUA/S M8-20/110	312 308 110	T-TUA/A4 M8-20/110	312 408 110	T-TUA M8	310 008 100
	150	60	T-TUA/S M8-60/150	312 308 150	T-TUA/A4 M8-60/150	312 408 150	T-TUA M8	310 008 100
M10	130	30	T-TUA/S M10-30/130	312 310 130	T-TUA/A4 M10-30/130	312 410 130	T-TUA M10	310 010 100
	165	65	T-TUA/S M10-65/165	312 310 165	T-TUA/A4 M10-65/165	312 410 165	T-TUA M10	310 010 100
M12	135	10	T-TUA/S M12-10/135	312 312 135	T-TUA/A4 M12-10/135	312 412 135	T-TUA M12	310 012 100
	160	35	T-TUA/S M12-35/160	312 312 160	T-TUA/A4 M12-35/160	312 412 160	T-TUA M12	310 012 100
	210	85	T-TUA/S M12-85/210	312 312 210	T-TUA/A4 M12-85/210	312 412 210	T-TUA M12	310 012 100
M16	165	20	T-TUA/S M16-20/165	312 316 165	T-TUA/A4 M16-20/165	312 416 165	T-TUA M16	310 016 100
	190	45	T-TUA/S M16-45/190	312 316 190	T-TUA/A4 M16-45/190	312 416 190	T-TUA M16	310 016 100
	230	85	T-TUA/S M16-85/230	312 316 230	T-TUA/A4 M16-85/230	312 416 230	T-TUA M16	310 016 100
	250	105	T-TUA/S M16-105/250	312 316 250	T-TUA/A4 M16-105/250	312 416 250	T-TUA M16	310 016 100
M20	220	20	T-TUA/S M20-120/220	312 320 220	T-TUA/A4 M20-120/220	312 420 220	T-TUA M20	310 020 100
	260	60	T-TUA/S M20-60/260	312 320 260	T-TUA/A4 M20-60/260	312 420 260	T-TUA M20	310 020 100
	300	100	T-TUA/S M20-100/300	312 320 300	T-TUA/A4 M20-100/300	312 420 300	T-TUA M20	310 020 100
M24	260	15	T-TUA/S M24-15/260	312 324 260	T-TUA/A4 M24-15/260	312 424 260	T-TUA M24	310 024 100
	300	55	T-TUA/S M20-55/300	312 324 300	T-TUA/A4 M20-55/300	312 424 300	T-TUA M24	310 024 100
Number of metal screw packaging, Every Box 10 pcs								
Chemical adhesive hose packaging quantity, Every Bax 10 pcs								

TOPIN-TP 200 ANCHORING REINFORCEMENT BINDER

Product Description:

TOPIN-TP200 is a cartridge packaged, include two components, room temperature curing epoxy paste adhesive. It is particularly recommended for use as an anchoring grout for reinforcing steel. Also, can prestressing cables in concrete or rock, vibration resistant reinforcement, has an excellent mechanical property. Suitable for application from all angles including horizontal and vertical directions. However, can be used to bond a wide variety of substrates including metal, ceramics, concrete and other common materials of construction.



Product Advantages:

- No VOC, green environmental protection products.
- Modified epoxy resin, styrene free, safe and nontoxic.
- High strength, good adhesion, the effect is equivalent to embedding.
- Aging resistance, good heat resistance, no creep at normal temperature.
- Long term load stability in humid environment.
- Acid and alkali resistance, good seismic performance, no expansion.
- Good thixotropy, suitable for side or top anchoring.
- High temperature resistant, weldable.

Use Method:

- Through the European CE safety certification, anchor bolts can be used with a minimum strength level of C20/C25, Standard concrete and reinforced concrete with maximum C50/C60.
- Anchor bolt can be anchored under static loads (such as self-weight, installation, support), Suitable for installation in dry or damp concrete.
- The temperature used in mortar can reach+50 degrees, also can reach+80 degrees in a short period of time, can be used in natural stone materials.
- Apply T-TUA/S (electro galvanized steel screw) in a dry environment. Suitable for fixing steel keels, supports and hangers, footings, supports, crossbeams, curtain walls, and equipment fixation.

Use Method:

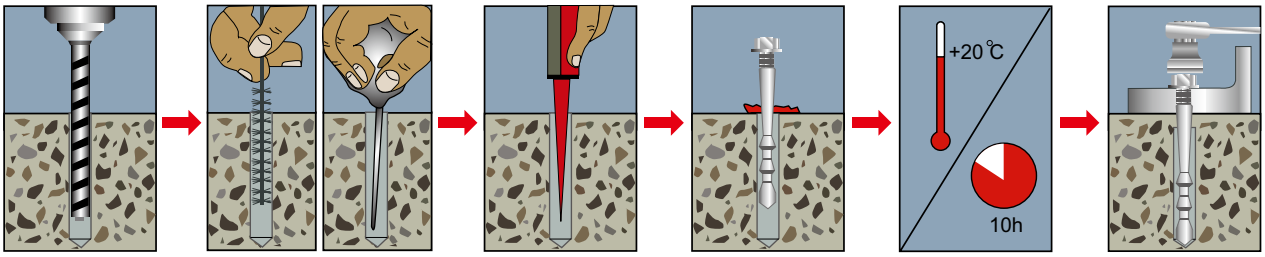

A. Drilling.
B. Empty (blow twice).
C. Gluing.
D. Rotate and insert the screw, visually check if the filling meets the standard.
E. Observation of curing time.
F. Apply torque and install in place.

TOPIN-TP200 ANCHORING AND PLANTING ADHESIVE

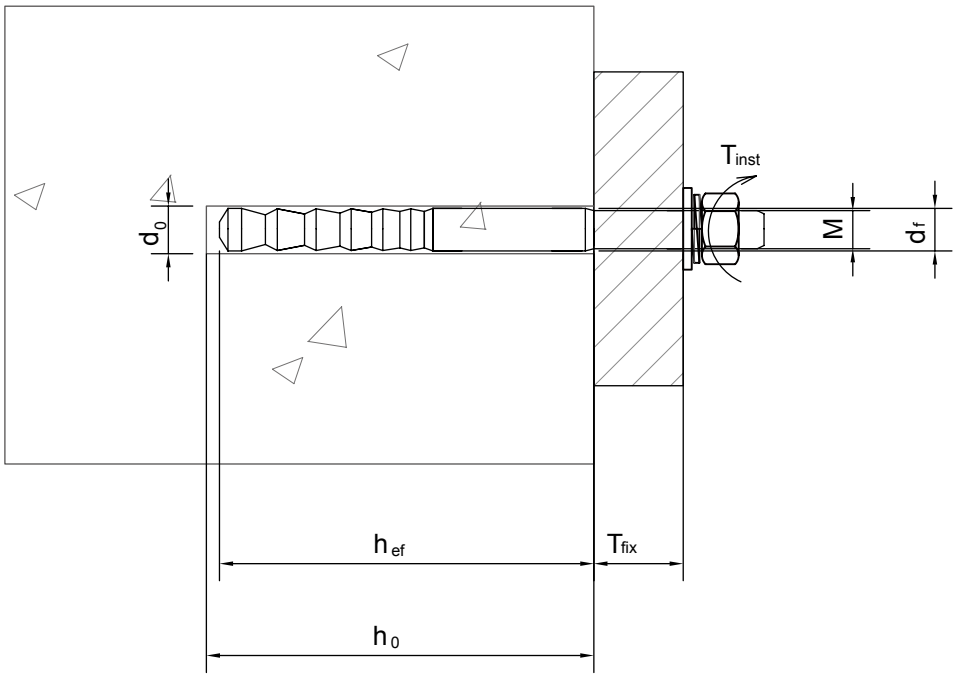

Product characteristics								
Anchor diameter	mm	M8	M10	M12	M16	M20	M24	M30
Minimum spacing	Smin(mm)	40	50	60	80	100	120	150
Minimum margin	Cmin(mm)	40	50	60	80	100	120	150
Minimum thickness of substrate	hmin(mm)	hef + 30mm ≥ 100mm						
drill depth	hef (mm)	60-95	60-120	70-145	80-190	90-240	95-285	120-350
Nominal drilling diameter	dcut ≤(mm)	10	12	14	18	24	28	35
Anchor plate opening diameter	df ≤(mm)	9	12	14	18	22	26	33
Installation torque	Tinst=(Nm)	10	20	40	80	120	160	200
Brush diameter	D ≥(mm)	12	14	16	20	26	30	37
Hole cleaning requirements M8-M16: 2* Blow + 2* Brush +2* Blow M20-M30(Needs 6bar Air compressor blowing): 2* Blow + 2* Brush +2* Blow								

performance parameter								
Anchor bolt diameter (mm)		M8	M10	M12	M16	M20	M24	M30
Non cracking concrete C20/C25	Design value of tensile bearing capacity (KN)	12.0	28.09	36.59	55.43	59.0	80.0	128.0
	Design value of shear bearing capacity (KN)	7.1	31.64	35.50	41.49	48.8	68.0	114.0
Cracked concrete C20/C25	Design value of tensile bearing capacity (KN)	9	22.47	27.44	51.62	34.5	52.0	75.0
	Design value of shear bearing capacity (KN)	7.5	16.08	18.22	23.65	50.5	75.5	115.5

TOPIN-TP200 CHEMICAL REINFORCEMENT BONDING SCREW



Anchor bolt: Carbon steel grade 5.8 Thickness of galvanized layer above 5 μm, Hot-dip galvanization thickness above 30 μm. Chemical reinforcement bonding screw T-TUA/A4 stainless steel A4 (1.4401)							
Reference (mm)	Length (mm)	Maximum anchor Fixed range Tfix (mm)	Carbon steel screw T-TUA/S	Product Ref. No. T-TUA/S	Stainless Steel Screw T-TUA/A4	Product No. T-TUA/A4	
M8	110	20	T-TUA/S M8-20/110	312 308 110	T-TUA/A4	312 408 110	Every Box has : 10 pcs
	150	60	T-TUA/S M8-60/150	312 308 150	T-TUA/A4 M8-60/150	312 408 150	
M10	130	30	T-TUA/S M8-60/150	312 308 150	T-TUA/A4	312 410 130	
	165	65	T-TUA/S M10-65/165	312 310 165	T-TUA/A4 M10-65/165	312 410 165	
M12	135	10	T-TUA/S M10-30/130	312 310 130	T-TUA/A4 M10-30/130	312 410 130	
	160	35	T-TUA/S M10-65/165	312 310 165	T-TUA/A4 M10-65/165	312 410 165	
	210	85	T-TUA/S M12-10/135	312 312 135	T-TUA/A4 M12-10/135	312 412 135	
M16	165	20	T-TUA/S M12-35/160	312 312 160	T-TUA/A4 M12-35/160	312 412 160	
	190	45	T-TUA/S M12-85/210	312 312 210	T-TUA/A4 M12-85/210	312 412 210	
	230	85	T-TUA/S M16-20/165	312 316 165	T-TUA/A4 M16-20/165	312 416 165	
	250	105	T-TUA/S M16-45/190	312 316 190	T-TUA/A4 M16-45/190	312 416 190	
M20	220	20	T-TUA/S M16-85/230	312 316 230	T-TUA/A4 M16-85/230	312 416 230	
	260	60	T-TUA/S M16-105/250	312 316 250	T-TUA/A4 M16-105/250	312 416 250	
	300	100	T-TUA/S M20-120/220	312 320 220	T-TUA/A4 M20-120/220	312 420 220	
M24	260	15	T-TUA/S M20-60/260	312 320 260	T-TUA/A4 M20-60/260	312 420 260	
	300	55	T-TUA/S M20-100/300	312 320 300	T-TUA/A4 M20-100/300	312 420 300	

INVERTED CONE SHAPED SHAPING SCREW



Anchor Bolt: Carbon steel grade 5.8 Thickness of galvanized layer above 5 μm, Hot-dip galvanization thickness is above 30 μm.							
Reference (mm)	length (mm)	Maximum anchor Fixed range tfix(mm)	Carbon steel screw	Product No.	stainless steel screw	Product No.	
M8	110	20	ETC/S M8-20/110	412 308 110	ETC/A4 M8-20/110	512 308 110	Every Box has : 10 pcs
M10	130	30	ETC/S M10-30/130	412 310 130	ETC/A4 M10-30/130	512 310 130	
M12	125	35	ETC/S M12-35/125	412 312 125	ETC/A4 M12-35/125	512 312 125	
M12	160	35	ETC/S M12-35/160	412 312 160	ETC/A4 M12-35/160	512 312 160	
M16	190	35	ETC/S M16-30/190	412 316 190	ETC/A4 M16-30/190	512 316 190	
M20	230	40	ETC/S M20-40/230	412 320 230	ETC/A4 M20-40/230	512 320 230	
M24	260	20	ETC/S M20-20/260	412 324 260	ETC/A4 M20-20/260	512 324 260	
M24	300	60	ETC/S M20-60/300	412 328 300	ETC/A4 M20-60/300	512 328 300	

TOPIN-TED UNDERCUT FASTENER



Product Description:
TOPIN-TED is a Composed of trapezoidal screw, open sleeve, gasket, and nut, suitable for cracking and non-cracking concrete. Also, can be stressed after installation without waiting for extra time. It is a mainstream post anchoring product at present. The product has a good tensile and shear properties, very excellent in anti-seismic and anti-fatigue properties.
Steel material: Grade 5.8 and 8.8, A4-70 stainless steel.

Product Advantages:
• Wide adaptable, can be applied to all post filling positions.
• Simple installation, no need to clear holes many times.
• Easy to install, can be easily stressed after installation.
• Superior tensile and shear properties.
• Seismic and fatigue resistance
• High temperature resistant, weldable.

Use Method:
• Make the power supply bracket of subway tunnel fixed.
• Pipeline layout and installation in industrial factories.
• Secure the installation of curtain wall embedded panels and mechanical equipment.

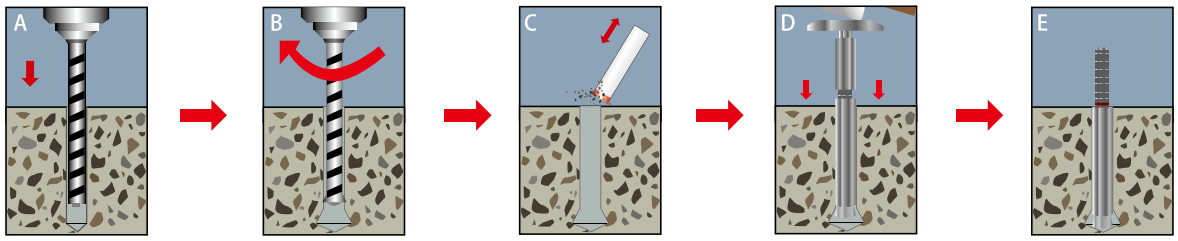

A. Select a suitable drill bit and start drilling.
B. Using specialized reaming drills to expand the hole.
C. Removing dust from the hole, using blowing and brushing.
D. Install the metal anchor bolt into the hole.
E. Hammer the special sleeve to the mark, then install it.

TOPIN-TED REAR CUT BOTTOM METAL ANCHOR BOLT

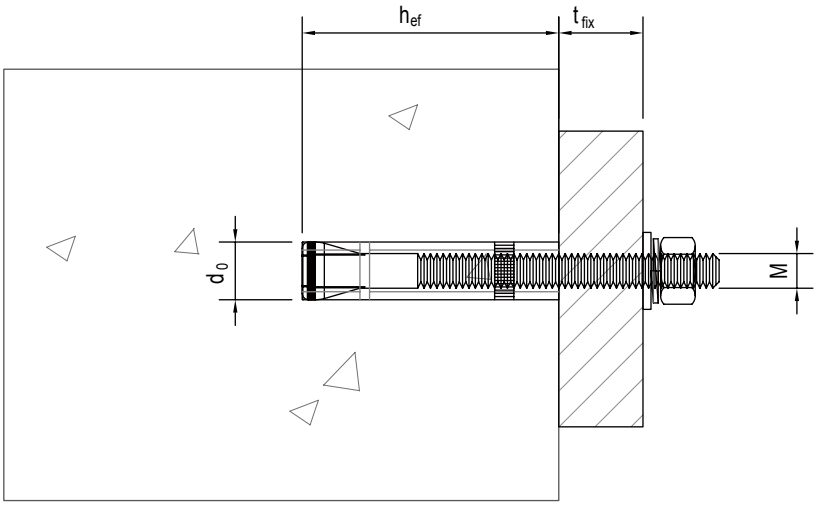

Product performance parameters									
Anchor diameter	mm		M8	M10	M12	M12	M16	M16	M20
Effective burial depth	hef(mm)		40	60	60	80	100	120	120
Non cracking concrete									
Tensile design value	C20/C25	Nrd(KN)	12.3	19.72	30.14	40.09	72.17	92.05	128
Design value of shear force		Vrd(KN)	10	24.41	16.53	44.59	33.45	85.12	109.3
Cracked concrete									
Tensile design value	C20/C25	Nrd(KN)	11.8	19.72	22.61	40.09	50.52	92.05	73.6
Design value of shear force		Vrd(KN)	10	24.41	16.53	44.59	33.45	85.12	73.6

Product specifications										
Reference	Screw diameter (mm)	Drilling diameter (mm)	drill depth ho(mm)	Effective burial depth hef(mm)	Anchor thickness tfix(mm)	Minimum spacing Smin(mm)	Minimum margin Cmin(mm)	Minimum thickness of substrate hmin(mm)	Installation torque (N/M)	Product No.
TED M8-12*40	M8	12	45	40	18	45	40	100	20	412 223 610
TED M10-14*60	M10	14	65	60	28	80	60	100	20	412 223 612
TED M12-18*60	M12	18	65	60	28	80	60	150	55	412 223 614
TED M12-18*80	M12	18	85	80	28	80	80	160	55	412 223 615
TED M16-22*100	M16	22	105	100	65	100	100	220	100	412 223 616
TED M16-22*120	M16	22	125	120	65	125	125	250	100	412 223 617
TED M20-35*120	M20	35	125	120	100	250	200	350	300	412 223 618

Product Accessories			
Drill Head		Drilling Accessories	

TOPIN-PIN Undercut Fastener with internal thread



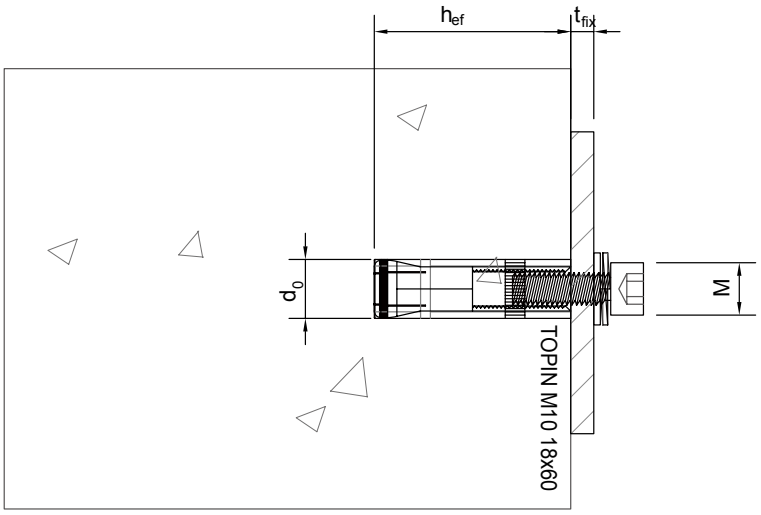

Product Description:

Composed of screws, open sleeves, and external bolts.

Steel material: Grade 5.8 and 8.8, A4-70 stainless steel.

Product Features:

Make the surface galvanized: the thickness of the galvanized coating is ≥ 5 μ m. Applied to ordinary indoor-outdoor environments; Thickness of hot-dip zinc coating □50 μ m. Applied in highly corrosive environments; The surface treatment can also be improved according to anti-corrosion requirements, also can be subjected to zinc infiltration or higher anti-corrosion measures rotten treatment.

A4-70 stainless steel: suitable for long-term high corrosion or acidic environments.

Scope of application: Cracked and non-cracked concrete C20 to C60.

Product Advantages:

• Excellent seismic performance.

• Shallow burial depth, easy installation, and high bearing capacity Can be used for small edge installation.

• When installation errors occur, the sleeve part does not need to be pulled out, avoiding concrete damage and improving installation efficiency.

Use Method:

A. Combine the sleeve and screw, after the sleeve has fully expanded, both ends of the sleeve and screw are flush.

B. Make the external nut enter inside the screw, customize the nut length according to the actual situation of the installation place.

C. Ensure that the sleeve is installed flush with the concrete surface and has zero error in burial depth.

D. Adapt to various types of external bolts to meet various working conditions.

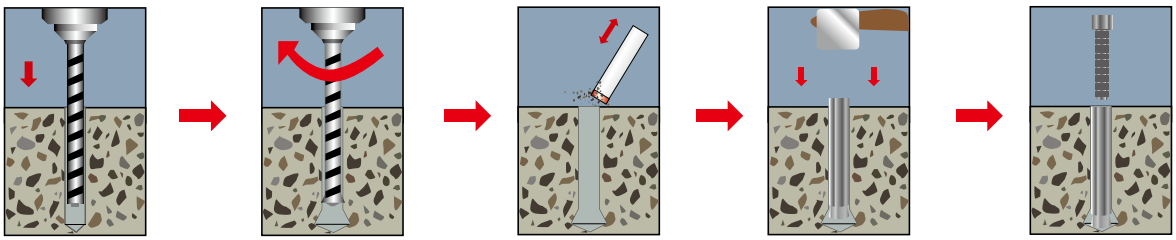

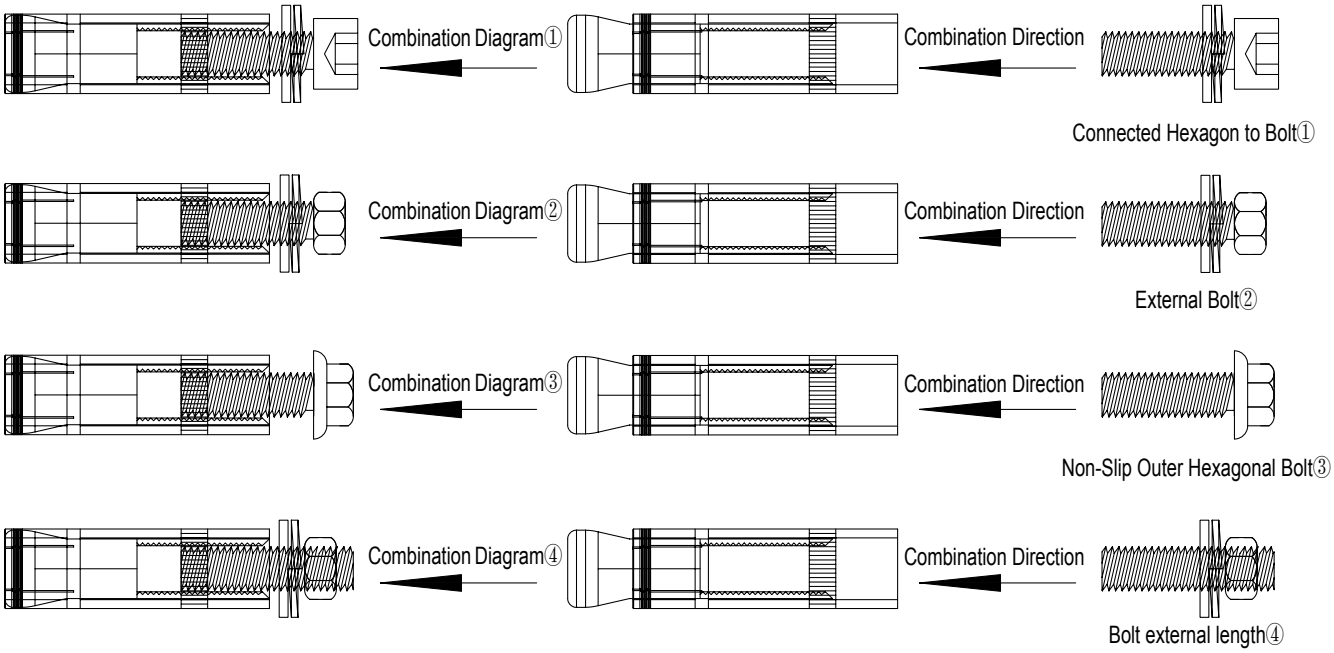

Product performance parameters

Anchor diameter	mm	M10	M12
Effective burial depth	h_{ef}[mm]	60	80
Tensile design value	N_{Rd}[kN]	23.05	30.50
Design value of shear force	V_{Rd}[kN]	30.70	60.59

Reference	Screw diameter (mm)	Drilling diameter (mm)	drill depth h_o (mm)	Effective burial depth h_{ef} (mm)	Anchor thickness t_{fix} (mm)	Minimum spacing S_{min} (mm)	Minimum margin C_{min} (mm)	Minimum thickness of substrate h_{min} (mm)	Installation torque (NM)
PIN-M10 18x60	M10	18	65	60	28	80	60	100	20
PIN-M12 20x80	M12	20	85	80	28	80	80	160	55

TOPIN – EXPANSION BOLT FASTENER

Product Description:

TOPIN- EXPANSION FASTENER is widely used in Asian Region for so many reasons, It has a good tensile and shear properties, often used for interior decoration, stair railing, elevator and machine installation.

TOPIN-T/S: Galvanized layer thickness 5 μ Above m.

TOPIN-T/F: Hot dip galvanized thickness 35 μ Above m.

TOPIN-T/A4: Stainless steel 1.4401.



Product Advantages:

• Enable penetration and pre-installation.

• After installation, can be immediately stressed.

• Ensure controllable force values and wildly safe performance during installation.

Use Method:

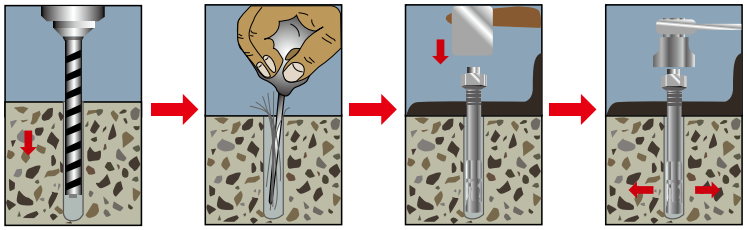

A. Select a suitable drill tool, and start drilling.

B. Removing dust from the hole, use blowing and brushing.

C. Hammer the metal anchor bolt into the hole.

D. Apply the required torque for installing machine.

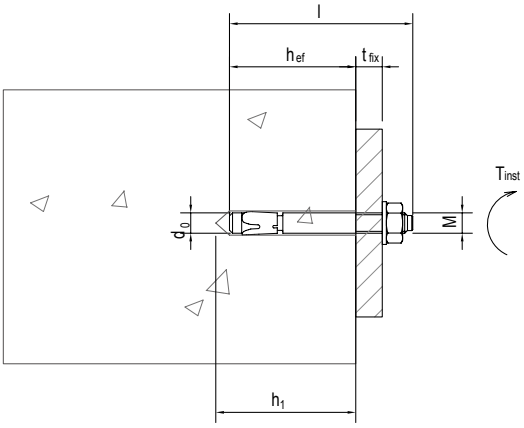

TOPIN – EXPANSION BOLT FASTENER

Product characteristics									
Anchor diameter	mm	M8	M10		M12			M16	
Minimum spacing	Smin(mm)	65	70	70	85	85	85	110	110
Minimum margin	Cmin(mm)	65	70	70	85	85	85	110	110
Minimum thickness of substrate	hmin(mm)	100	110	110	130	130	130	168	168
Shallow burial depth	h1 (mm)	45	60	60	70	70	70	90	90
Standard burial depth	h1 (mm)	55	70	70	85	85	85	105	105
Nominal drilling diameter	dcut ≤(mm)	8	10	10	12	12	12	16	16
Anchor plate opening diameter	df ≤(mm)	9	12	12	14	14	14	18	18
Installation torque	Tinst=(Nm)	20	38	38	65	65	65	140	140
Brush diameter	D ≥(mm)	12	14	14	16	16	16	20	20
Anchor thickness	Tfix(mm)	20	25	35	30	40	70	15	35
Anchor Total length	L(mm)	75	90	100	110	120	150	120	140
Hole cleaning requirements:		1* Blow, 1* Brush							

Performance parameter						
Anchor diameter (mm)		Buried depth	M8	M10	M12	M16
Non cracking concreteC20/C25	Tensile bearing capacity Design value (KN)	Shallow burial depth	4.6	8.0	9.5	14.5
		Standard burial depth	6.5	9.2	13.0	20.0
	Shear bearing capacity Design value (KN)	Shallow burial depth	5.5	8.5	12.0	33.5
		Standard burial depth	6.8	11.5	18.0	33.5

TOPIN-T Expansion Bolt Fastener					
References	Anchored thickness tfix(mm)	Producr NO.	Specifications	Product NO.	Packaging quantity (pcs)
TOPIN-T/S M8*75	18	666 008 075	TOPIN-T/A4 M8*75	555 008 075	100
TOPIN-T/S M10*90	23	666 010 090	TOPIN-T/A4 M10*90	555 010 090	100
TOPIN-T/S M10*100	33	666 010 100	TOPIN-T/A4 M10*100	555 010 100	100
TOPIN-T/S M12*110	33	666 012 110	TOPIN-T/A4 M12*110	555 012 110	50
TOPIN-T/S M12*120	43	666 012 120	TOPIN-T/A4 M12*120	555 012 120	50
TOPIN-T/S M12*150	65	666 012 150	TOPIN-T/A4 M12*150	555 012 150	50
TOPIN-T/S M16*120	15	666 016 120	TOPIN-T/A4 M16*120	555 016 120	25
TOPIN-T/S M16*140	35	666 016 150	TOPIN-T/A4 M16*140	555 016 150	25
TOPIN-T/S M20*120	10	666 020 120	TOPIN-T/A4 M20*120	555 020 120	20
TOPIN-T/S M20*160	40	666 020 160	TOPIN-T/A4 M20*160	555 020 160	20
TOPIN-T/S M20*200	80	666 020 200	TOPIN-T/A4 M20*200	555 020 200	20

TOPIN-CS CONCRETE SCREWS

Product Description:

TOPIN-CS is an innovative anchor bolt, back up with screw installation, there is no stress on the base material, has a good tensile and shear properties, very suitable for cracked and non-cracked concrete.



Product Advantages:

- Eliminates the need for complex installation tools.
- Reduce the expansion force on the substrate.
- Excellent seismic and fatigue resistance.
- Can be used for light and medium anchoring, such as railings, cable tray, curtain wall, window parts, metal profiles, ventilation ducts, wooden components, ceilings, etc.
- Applicable substrates: cracked concrete, non-cracked concrete, concrete hollow bricks, natural stone, solid bricks/masonry, solid lime sand bricks, hollow lime sand bricks, lightweight aggregate concrete, etc.

Use Method:

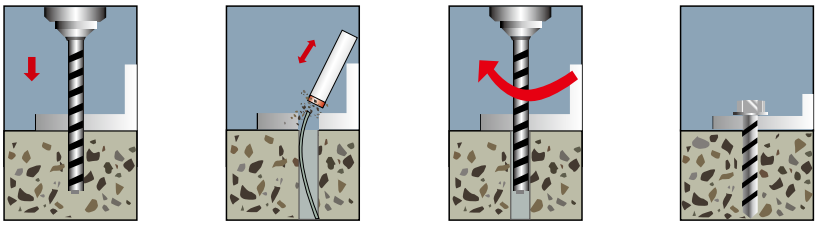

A. Drilling.
B. Removing dust from the hole.
C. Install the metal anchor bolt into the hole.
D. Apply the required torque, install in place.

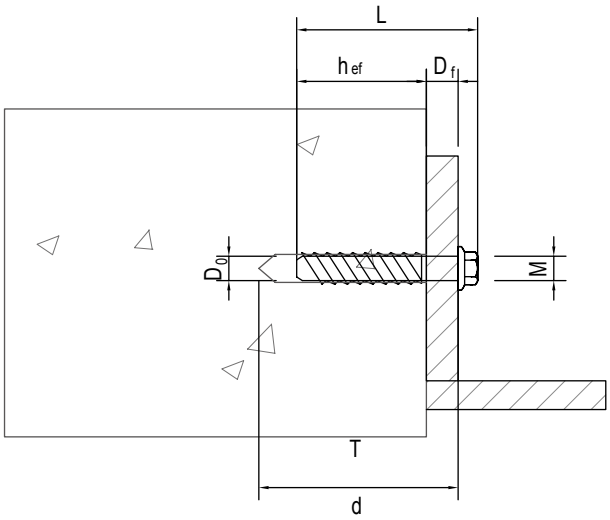

TOPIN-CS CONCRETE SCREWS

Type	Art.Nr.	Drill diameter /D0(mm)	Drill depth / Td(mm)	Bore diameter of anchored object /Df(mm)	Length /L(mm)	Wrench Size /dt(mm)	Packaging Quantity(pcs)
TD M5×50	711 105 050	5	50	7	50	5	100
TD M6×30	711 106 030	6	30	10	30	6	100
TD M6×50	711 106 050	6	50	10	50	6	100
TD M6×80	711 106 080	6	80	10	80	6	50
TD M6×100	711 106 100	6	100	10	100	6	100
TD M6×120	711 106 120	6	120	10	120	6	100
TD M6×140	711 106 140	6	140	10	140	6	50
TD M8×50	711 108 050	8	50	13	50	8	50
TD M8×75	711 108 075	8	75	13	75	8	50
TD M8×100	711 108 100	8	100	13	100	8	50
TD M10×60	711 110 060	10	60	17	60	10	50
TD M10×75	711 110 075	10	75	17	75	10	50
TD M10×110	711 110 110	10	110	17	110	10	20
TD M10×140	711 110 140	10	140	17	140	10	25
TD M10×160	711 110 160	10	160	17	160	10	20
TD M12×75	711 112 075	12	75	19	75	12	25
TD M12×100	711 112 100	12	100	19	100	12	25
TD M12×150	711 112 150	12	150	19	150	12	20
TD M16×100	711 116 100	16	100	23	100	16	20
TD M16×150	711 116 130	16	150	23	150	16	10

TOPIN®

TOPIN UNDERCUT ANCHORS

TOPIN DRILLING EQUIPMENT DDM-S

TOPIN Portable Drilling Machine.

• The machine is designed reasonably, with small size, light weight, and more convenient operation.

• Adopting 220V voltage, less power consumption, energy-saving and environmentally protected.

• Adopting dual insulation design, safe and stable performance.

• Adapt to the needs of large and small batches of surface materials for back bolt drilling.

• According to customer design requirements, two or more specifications of back bolts can be used for drilling.



Equipment technical parameters

Voltage	220V	No-load Speed	10800r/min
Current	3.5A	Insulation Level	Secondary
Input Power	1400W	Weight	10.5KG
Output Power	850W	Dimensions	560 x 240 x 320mm

Note

• Before opening or closing, the inlet valve must be opened, and drilling is not allowed without cooling water.

• Install a leakage protector on the power socket. The socket should be between 1.5-2m above the ground, and the voltage should be controlled at 220V. If it is too high or too low, it will cause damage to the motor.

• Be starting the machine or when replacing the drill bit, it is necessary to check whether the positioning pin and O-ring are installed in place.

• The cooling water should be from a clean source with a water pressure of 3-6kg/cm2.

• When drilling or expanding holes, the motor speed must not be adjusted.

• When drilling or expanding holes, the handle pressure should not be too fast to avoid damage to the motor and drill bit. Only when the drilling reaches the required depth can the drilling handle be pressed. After the drilling is completed, return the drilling handle.

Drilling equipment

Drill Size

Requirements for drilling diameter and depth of TOPIN back bolt.

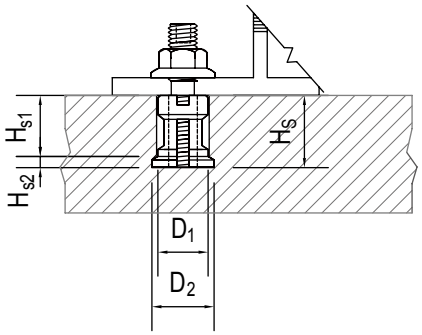

size	M5	M6s	M6	M8	M10
HS1	±0.2	±0.2	±0.2	±0.2	±0.4
HS2	+0.3	+0.3	+0.3	+0.3	+0.3
D1 (Tolerance is ±0.3)	φ7	φ9	φ11	φ13	φ14
D2(Tolerance is±0.3)	φ9	φ11	φ13	φ15	φ16
HS (ft. difference is +0.5-0.2)	4-9	8-12	8-20	10-40	Above30

Table unit: mm



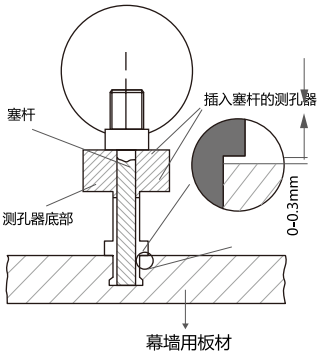

Hole Detection Tools

• Check the positioning of the drill bit for any abnormalities. f there are no abnormalities, drill a hole and use a testing tool (As shown in the left image) to strictly inspect it.

• Only after passing the inspection can drilling be carried out, and then the 20th hole can be tested If there is any deviation, it is necessary to recheck the previous 20 holes.

• Select different types of drill bits for different stones, and the optimal number of holes per drill bit is between 120 and 200.

• When the drill bit is worn and the drilling hole cannot meet the requirements (special testing tools are used to check whether the hole position is qualified, and specific data requirements can be found in the TOPIN back bolt drilling requirements to ensure timely replacement
of the drill bit).

• If there are any abnormalities in the tool, the drilling bit should be replaced in a timely manner.

• When measuring the anchor bolt hole, it is necessary to ensure that the anchor bolt measuring sleeve is fully insert into the pushed to the bottom and ensure that the measuring device does not lift more than 1mm.

TOPIN DIAMOND BIT-TSZ

Rear Cut Curtain Wall Drill Bit

• Diamond sintered drill bits are preferred for matching TOPIN back bolts.
• Sintered drill bits have better cutting effects on the panel and better control over the accuracy of the aperture.
• TOPIN sintered drilling bits can be installed with any brand of drilling rig.
• After the sintered drilling bit is worn, the drilling bit matrix can be reused, making it more environmentally protected.
• The length of the drill bit can be customized according to needs.



APPLICATION AREAS

This drilling bit is suitable for various surface materials, especially natural stone, artificial stone, ceramic board, GRC board and various new types of panels.

Application Notes

• Use cooling water at a certain pressure.
• Do not dry drill the drilling bit on the panel to avoid danger.
• Please pay attention to safety protection when operating the drilling bit.

TOPIN –TSZ

HS	Dimension (mm)	Package quantity	Item No.
6	7/9	1	212 101 009
8	9/11	1	212 101 010
15	11/13	1	212 101 011
20	11/13	1	212 101 012
15	13/15	1	212 101 021
20	13/15	1	212 101 022
35	14/16	1	212 101 023
40	14/16	1	212 101 024
45	14/16	1	212 101 025

TOPIN UNDERCUT ANCHOR T-PEQ/A4(Expansion Type)

PRODUCT DESCRIPTION

TOPIN Expansion type back bolt adopts expansion installation.
Composed of expansion sleeve and T-bolts.
Working Principle: the installation tool is used to strike the sleeve, which transmits the pressure to the expansion ring, causing it to expand and deform. The deform expansion ring forms a lock key ring form, a lock key structure in the back-bolt hole.



APPLICATION AREAS

This product is suitable for fast anchoring installation of natural granite and marble, and should be carefully used for soft plates such as sandstone, and cave stone.

PRODUCT ADVANTAGES

Easy to install, fast and efficient.

Model	Planel thickness (mm)	Implantation depth(mm)	Dimension (mm)	Item No.	Package quantity
T-PEQ/A4 M6*30	25	12	11/13	512 111 130	200
T-PEQ/A4 M6*35	30	15	11/13	512 111 135	200
T-PEQ/A4 M6*40	35	20	11/13	512 111 140	150
T-PEQ/A4 M8*35	30	15	13/15	512 111 235	150
T-PEQ/A4 M8*40	35	20	13/15	512 111 240	100
T-PEQ/A4 M8*50	40	25	13/15	512 111 250	100
T-PEQ/A4 M8*50	50	30	13/15	512 111 330	100
Non-standard customization					

Mounting sleeve M6\M8



Fully automatic installation



Manual install

REPORT CONTENT

Test Product: TOPIN Expanded Sheet Stone Back Bolt
Specification: M6 * 35-15 Implantation depth 15mm
Width :250mm*250mm
Thickness: 30mm

Analysis table for PEQ type force value of TOPIN back bolt

TEST 1

Test Items	Test Method	Maximum Load	Failure Mode	Remark
Normal tension value	In-house method	10.28KN	Stone cone failure	——
		9.59KN	Stone cone failure	——
		9.18KN	Stone cone failure	——
		9.42KN	Stone cone failure	——
		10.04KN	Stone splitting failure	——
	Average value	9.70KN		

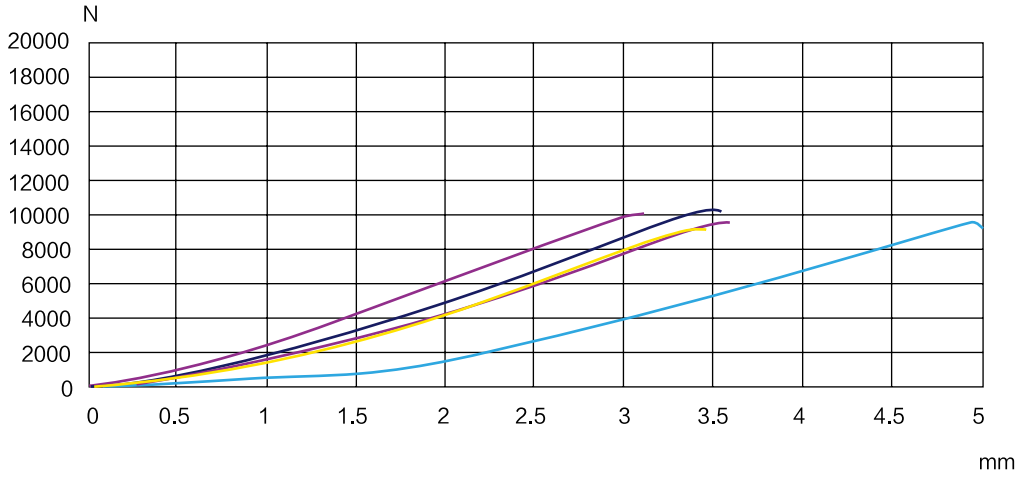

TEST 2

Test Items	Test Method	Maximum Load	Failure Mode	Remark
Normal tension value	In-house method	10.28KN	Stone cone failure	——
		9.59KN	Stone cone failure	——
		9.18KN	Stone cone failure	——
		9.42KN	Stone cone failure	——
		10.04KN	Stone splitting failure	——
	Average value	9.70KN		

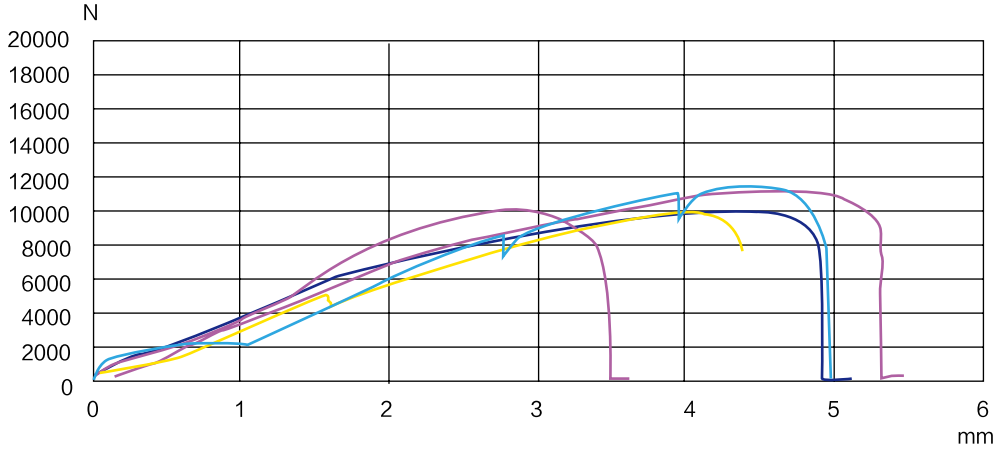

TOPIN UNDERCUT ANCHOR T-PEA/A4 (Perfect type)

PRODUCT DESCRIPTION



The back bolt is composed of a back-bolt head cover, a scoring screw, and a slip nut.
The back bolt can be used in conjunction with AB type epoxy resin adhesive, and it is recommended to choose TP-200 high-strength epoxy resin adhesive from UK TOPIN Company.
The back-bolt head can be embedded arbitrarily according to the depth of the panel drilling, until it is installed to the bottom of the expansion hole.
Using a torque wrench to twist the screw, it can be installed in place by engaging the screw and the thread teeth on the inner wall of the back-bolt sleeve layer by layer.
When the back bolt expands in the panel, it does not generate internal stress and can better control panel damage.
There are fewer requirements for the opening size of hanging components.
Easy to install, fast, and safe.

APPLICATION AREAS

This back bolt is suitable for anchoring various surface materials, especially natural stone, artificial stone, ceramic board, clay board, GRC board, and various new types of panels.

INSTALLATION PRECAUTIONS

When cleaning the dust inside the hole with adhesive, the amount of adhesive injected should be about 50% of the hole depth. After installing the back bolt, pay attention to the epoxy time.

INSTALLATION ACCESSORIES

Model	Panel thickness T(mm)	Implantation depth HS(mm)	Nut diamater R (mm)	Item No.	Package quantity
T-PEA/A4 M6*12	20	12	14	512 221 211	500
T-PEA/A4 M6*15	25	15	14	512 221 212	450
T-PEA/A4 M6*20	30	20	14	512 221 213	400
T-PEA/A4 M6*25	40	25	14	512 221 214	400
T-PEA/A4 M6*30	50	30	14	512 221 215	300
T-PEA/A4 M8*10	12	10	18	512 221 301	400
T-PEA/A4 M8*12	15	12	18	512 221 302	300
T-PEA/A4 M8*15	20	15	18	512 221 303	300
T-PEA/A4 M8*20	30	20	18	512 221 304	250
T-PEA/A4 M8*30	50	30	18	512 221 305	150

Mounting sleeve M6\M8



Fully automatic installation



Semi automatic installation

ORDINARY BACK-BOLT

UK INTERTEK proof of laboratory data, TOPIN-T-PEA/A4 the adhesive injection back bolt has excellent force performance on stone panels.

REPORT CONTENT

Test product: TOPIN rotary stone back-bolt Width: 250mm*250mm
Specification: M6*15-30 implantation depth 15mm Thickness: 30mm

Analysis table of force value after Injection of adhesion of TOPIN Back bolt

TEST 1

Test Items	Test Method	Maximum Load	Failure Mode	Remark
Tensile force value after glue injection	In-house method	10.30KN	Stone cone failure	——
		10.33KN	Stone cone failure	——
		12.63KN	Stone cone failure	——
		13.61KN	Stone cone failure	——
		12.28KN	Stone splitting failure	——
	Average value	11.83KN		

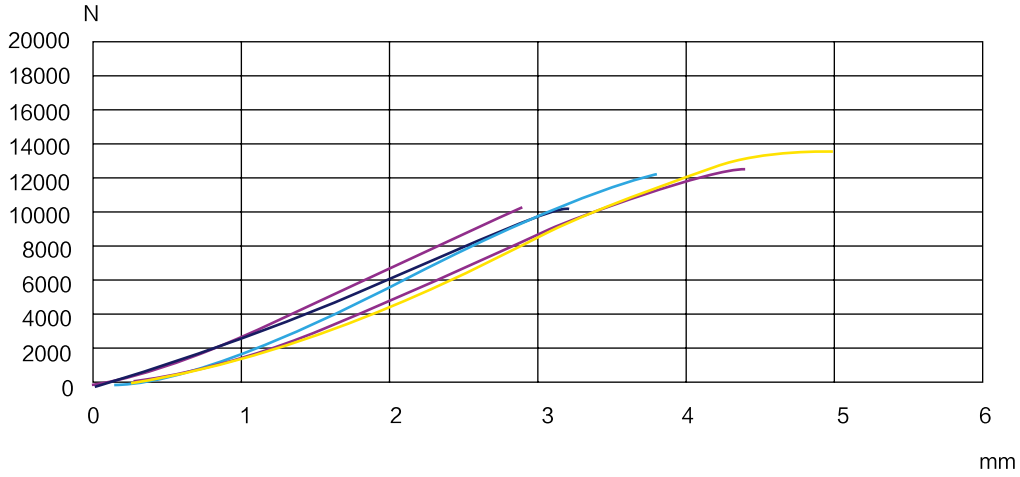

TEST 2

Test Items	Test Method	Maximum Load	Failure Mode	Remark
Tensile force value after glue injection	In-house method	10.60KN		——
		10.54KN		——
		12.18KN		——
		10.00KN		——
		10.63KN		——
	Average value	10.40KN		

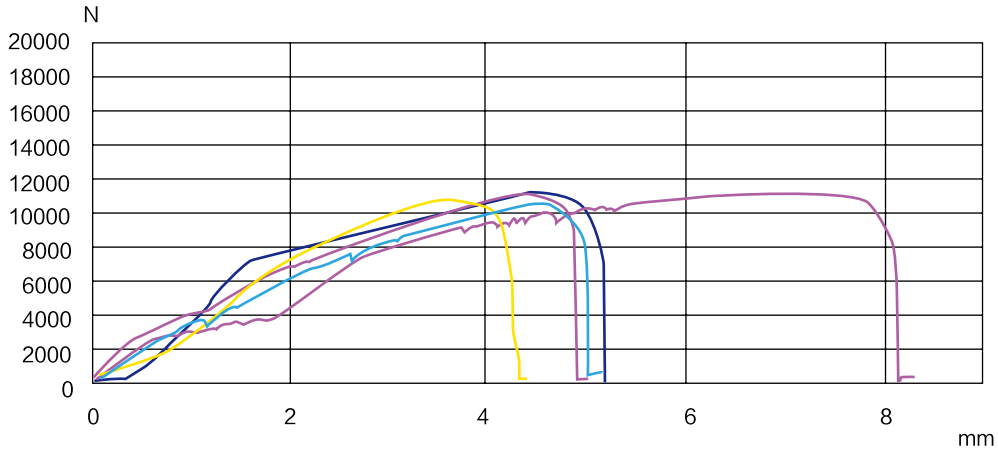

TOPIN UNDERCUT ANCHOR T-PST/A4 (Super Type)

PRODUCT DESCRIPTION

The super type back bolt is composed of a specially designed back bolt sleeve, threaded screws, and seismic nuts.

The back-bolt sleeve can be used with AB type epoxy resin adhesive, and it is recommended to choose TP-200 high-strength epoxy resin adhesive from UK TOPIN.

The back-bolt sleeve can be embedded arbitrarily according to the depth of the panel drilling, until it is installed to the bottom of the expansion hole.

By using an adjustable torque rotor to rotate the screw, it can be installed in place by engaging the screw and the screw teeth inside the back-bolt sleeve layer by layer.

When the back bolt expands in the panel, it does not generate internal stress and can control panel damage to zero.

There are fewer requirements for the opening size of hanging components.

There is no need to wait for epoxy time, and it can be installed on the wall.

Installation is simple, fast, and safe.



APPLICATION AREAS

Suitable for anchoring various ultra-thick and overweight natural panels, especially for oversized, ultra-high, and special shaped stones and lines.

INSTALLATION PRECAUTIONS

1. Before installation, each hole diameter needs to be measured with a hole measuring instrument
2. Pay attention to cleaning the dust inside the hole.
3. The amount of glue injected is about 50% of the hole depth.

INSTALLATION ACCESSORIES

Adjustable torque pistol drill (torque range: 15-20 Nm) with hexagonal socket head and socket wrench (see details later)

Model	Panel thickness T(mm)	Implantation depth HS(mm)	Nut diamater R (mm)	Item No.	Package quantity
T-PST/A4 M10 *15	50	20	20	722 111 715	150
T-PST/A4 M10 *20	80	30	20	722 111 720	120
T-PST/A4 M10 *30	100<T<200	40	20	722 111 730	100
T-PST/A4 MIO *40	200^T	50	20	722 111 740	100

ORDINARY BACK BOLTS

UK INTERTEK proof of laboratory data, TOPIN-T-PST/A4 the (super type) adhesive injection back bolt has excellent performance in anchoring natural stone panels.

REPORT CONTENT

Test product: TOPIN rotary stone back-bolt
Specification: M10 * 30-60 Implantation depth
Width: 300mm*300mm wide
Thickness: 60mm thick

Analysis Table for T-PST/A4 type force value of TOPIN Back bolt

TEST 1

Test Items	Test Method	Maximum Load	Failure Mode	Remark
Tensile force value after glue injection	In-house method	25.70KN	Stone cone failure	——
		24.67KN	Stone damage	——
		23.62KN	Stone damage	——
	Average value	24.66KN		

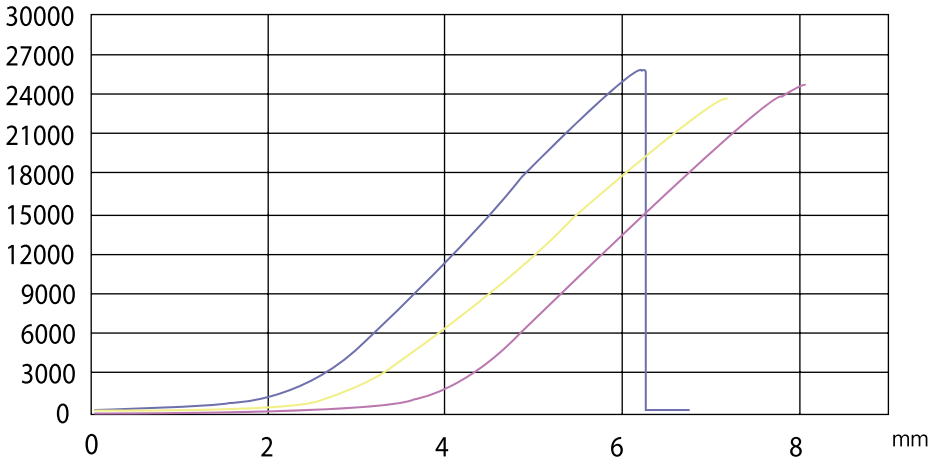

TEST 2

Test Items	Test Method	Maximum Load	Failure Mode	Remark
Tensile force value after glue injection	In-house method	24.39KN		——
		23.90KN		——
		24.40KN		——
	Average value	24.23KN		

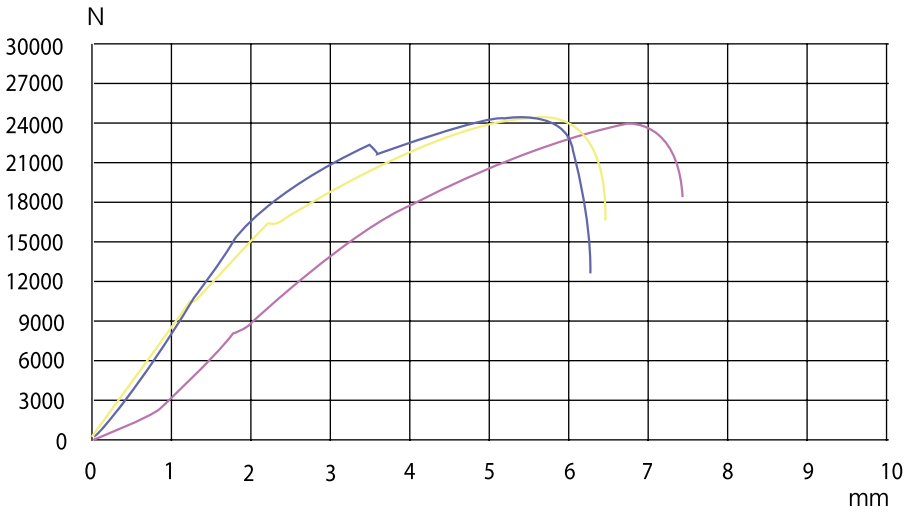

TOPIN UNDERCUT ANCHOR T-PUT/A4 (Professional type)

PRODUCT DESCRIPTION

The professional back bolt consists of a specially designed back bolt sleeve, limit screw, and seismic.



The back-bolt sleeve can be used with AB type epoxy resin adhesive, and it is recommended to choose TP-200 high-strength epoxy resin adhesive of UK TOPIN.

The back-bolt sleeve can be embedded arbitrarily according to the depth of the panel drilling, until it is installed to the bottom of the expansion hole.

Using an adjustable torque rotor to rotate the screw, it can be installed in place by interlocking the screw with the internal thread teeth of the back-bolt sleeve layer by layer.

When the back bolt expands in the panel, it does not generate internal stress and can control panel damage to zero.

There are fewer requirements for the opening size of hanging components.

No need to wait for epoxy time, can be mounted on the wall after installation

Installation is simple, fast, and safe.

APPLICAATION AREAS

Suitable for anchoring various ultra-thin and ultra-light panels. Especially artificial GRC boards, calcium silicate boards, ceramic boards, clay boards, and microcrystalline glass.

INSTALLATION PRECAUTIONS

1. Before installation, each hole diameter needs to be measured with a hole measuring instrument.
2. Pay attention to cleaning the dust inside the hole
3. The glue injection amount is about 50% of the hole depth

INSTALLATION ACCESSORIES

Adjustable torque pistol drill (torque range: 5-8 Nm) with hexagonal socket head and socket wrench (see details later)

Model	Panel thickness T(mm)	Implantation depth HS(mm)	Nut diamater R (mm)	Item No.	Package quantity
T-PUT/A4 M5*6	8	6	12	212 21 1 305	800
T-PUT/A4 M5*8	10	6	14	312 211 310	800
T-PUT/A4 M6*8	13	8	14	312 21 1 320	800
T-PUT/A4 M6*10	18	12	14	312 21 1 325	600
T-PUT/A4 M6*12	20	12	14	312 21 1 330	600
Mounting sleeve M6\M8					
Fully automatic installation				Semi automatic installation	





ORDINARY BACK BOLT

UK INTERTEK proof of laboratory data, TOPIN-T-PUT/A4 (Professional) The adhesive injection back bolt has excellent performance in anchoring GRC plates

REPORT CONTENT

Test product: TOPIN rotary injection rubber back bolt.
Specification: M6 * 8-20 Implantation depth 8mm.
Width:200mm*200m
Thickness:20mm

Analysis Table for PUT-type Force Value of TOPIN Back Bolt

TEST 1

Test Items	Test Method	Maximum Load	Failure Mode	Remark
Tensile force value after glue injection	In-house method	3.45KN	Stone breakout	——
		3.98KN	Stone breakout	——
		3.60KN	Stone breakout	——
		4.25KN	Stone breakout	——
		3.09KN	Stone breakout	——
	Average value	3.67KN		

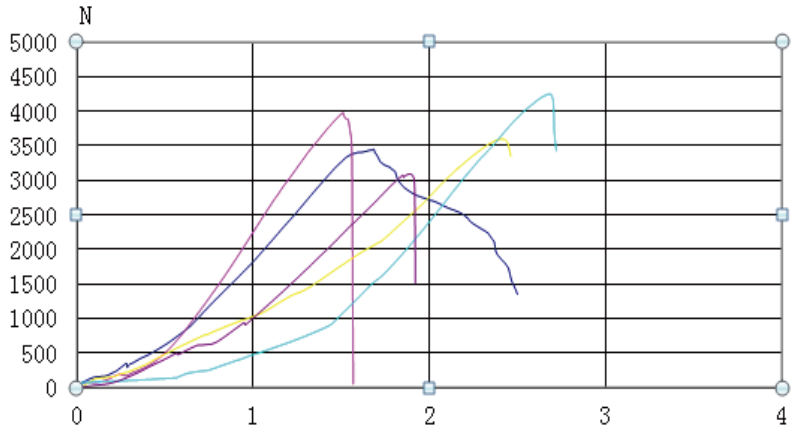

TEST 2

Test Items	Test Method	Maximum Load	Failure Mode	Remark
Tensile force value after glue injection	In-house method	5.56KN	Stone breakout	——
		4.78KN	Stone breakout	——
		5.48KN	Stone breakout	——
		4.73KN	Stone breakout	——
		5.19KN	Stone breakout	——
	Average value	5.15KN		

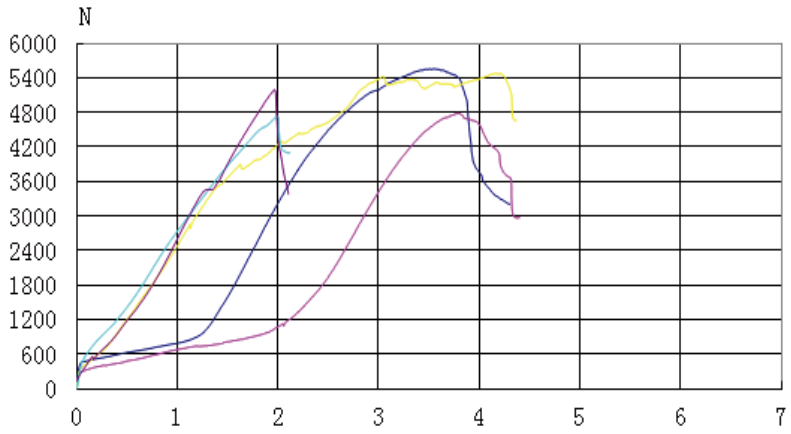

TOPIN UNDERCUT ANCHOR T-PWT/A4 (Loose Plate Specialty)

PRODUCT DESCRIPTION

The professional back-bolt consists of a specially designed back bolt sleeve, limit screw, and seismic nut.



The back-bolt sleeve can be used with AB type epoxy resin adhesive, and it is recommended to choose TP-200 high-strength epoxy resin adhesive from UK TOPIN.

The back-bolt sleeve can be embedded arbitrarily according to the depth of the panel drilling, until it is installed to the bottom of the expansion hole.

Using an adjustable torque rotor to rotate the screw, it can be installed in place by interlocking the screw with the internal thread teeth of the back-bolt sleeve layer by layer.

When the back bolt expands in the panel, it does not generate internal stress and can control panel damage to zero.

There are fewer requirements for the opening size of hanging components.

There is no need to wait for epoxy time, and it can be installed on the wall.

Installation is simple, fast and safe.

APPLICATION AREAS

Suitable for anchoring plates with many holes, especially artificial honeycomb board stones.

INSTALLATION PRECAUTION

1. Before installation, a hole measuring instrument needs to be used to measure straight holes.
2. Pay attention to dust inside the hole.
3. The glue injection amount is about 80% of the hole depth.

INSTALLATION ACCESSORIES

Adjustable torque pistol drill (torque range: 8-15 Nm), hexagonal screwdriver and socket grip

Model	Panel thickness T(mm)	Implantation depth HS(mm)	Nut diamater R (mm)	Item No.	Package quantity
T-PWT/A4 M8*15	25	15	14	112 211 115	400
T-PWT/A4 M8*20	35	20	14	112 211 120	350

Mounting sleeve M6\M8



Fully automatic installation



Semi automatic installation

TOPIN UNDERCUT ANCHOR T-PGT/A4 (Glass back bolt)

PRODUCT DESCRIPTION

TOPIN glass back bolt is composed of a specially designed back bolt sleeve, limit screw, pressure divider component, and nut.
Before installing the back-bolt sleeve, glass glue needs to be injected into the hole.
The back-bolt sleeve can be embedded arbitrarily according to the depth of the panel drilling, until it is installed to the bottom of the expansion hole.
By using an adjustable torque rotor to rotate the screw, it can be installed in place by engaging the screw and the screw teeth inside the back-bolt sleeve layer by layer.
When the back bolt expands in the panel, it does not generate internal stress and can control panel damage to zero.
There are fewer requirements for the opening size of hanging components.
There is no need to wait for epoxy time, and it can be installed on the wall.
Easy, fast, and secure installation.



APPLICATION AREAS

Suitable for anchoring high brittleness plates, especially quartz and glass plates.

INSTALLATION PRECAUTIONS

1- Before installation, a hole measuring instrument needs to be used to measure straight holes.
2- Pay attention to the absence of dust and debris in the hole.
3- The glue injection amount is about 50% of the hole depth.

INSTALLATION ACCESSORIES

Adjustable torque pistol drill (torque range: 8-15 Nm), hexagonal screwdriver and socket wrench.

Model	Panel Thickness T(mm)	Outer glass thickness T(mm)	Film thickness (mm)	Item No.	Package Quantity(个)
T-PGT/A4 M8*10	10	3-10	SGP1.52\2.28	723 08 010	400
T-PGT/A4 M8*12	12	3-12	SGP1.52\2.28	723 08 012	300
T-PGT/A4 M8*15	15	3-15	SGP1.52\2.28	723 08 015	300
T-PGT/A4 M10*12	12	3-12	SGP1.52\2.28	723 10 012	150
T-PGT/A4 M10*15	15	3-15	SGP1.52\2.28	723 10 015	150
T-PGT/A4 M10*20	20	3-20	SGP1.52\2.28	723 10 020	120
T-PGT/A4 M16*15	10	3-10	SGP1.52\2.28	723 10 1615	30
T-PGT/A4 M16*20	15	3-15	SGP1.52\2.28	723 10 1620	30
Mounting sleeve  Fully automatic installation				 Semi automatic installation	

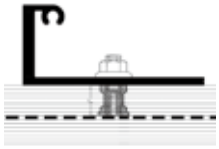


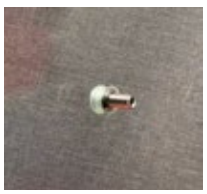


Comprehensive improvement in safety after injection of adhesive into the back bolt

• Due to the excellent toughness of the improved epoxy product, it can maximize the high elasticity between the back bolt and the panel, avoiding rigid contact between the back bolt and the panel.
• After injection, all the air inside the hole can be squeezed out and the aperture can be closed, thus limiting the erosion of various gases in the atmosphere. Due to the full filling of the glue in the back-bolt holes, the back bolt forms a more standard inverted cone structure in the panel, ensuring that each back bolt has the same and uniform tensile shear force.
• After injecting adhesive into the back bolt, it can provide two layers of protection for the stone curtain wall. One is the bonding and anchoring between the epoxy product and the inner wall of the panel, and the other is the mechanical locking structure between the back bolt and the panel.
• After glue injection, the error of construction personnel can be minimized.
• It is more reasonable and legal to use back bolt glue injection during construction to reduce legal risks.
• The UK INTERTEK laboratory has clear data proving that the various tensile values after injection have increased by nearly 25%.

Comparison diagram of adhesive injection back bolt testing

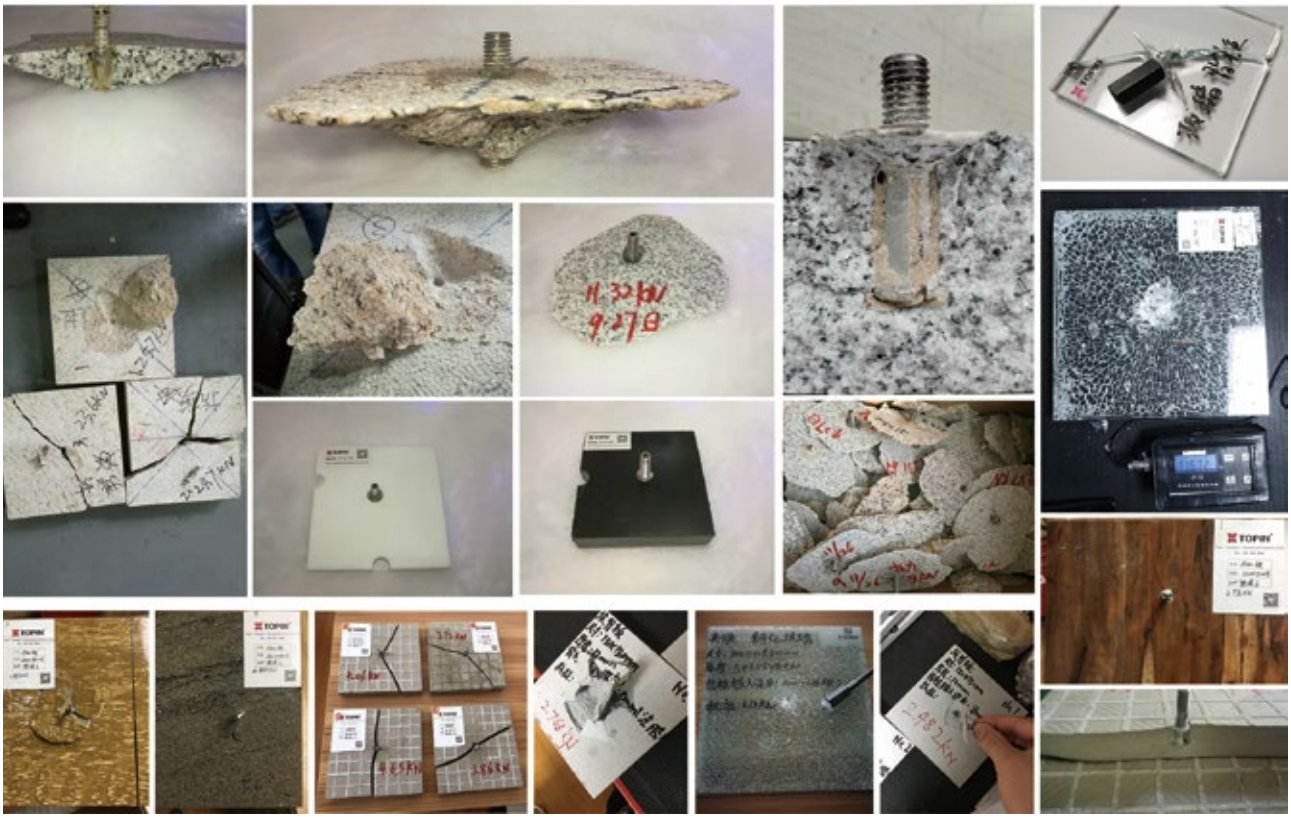

T-PRT Prefabricated back bolt

PRODUCT DESCRIPTION

Green, environmental protection, and regeneration are the cornerstones on which the world economy relies for development. The Chinese construction industry has also actively responded to this call and developed many new artificial materials, such as UHPC, GRC, HPL, ETERPAN Glass plate, etc. New materials not only have different shapes and colorful colors, but also are green and environmentally friendly.

TOPIN's PRT prefabricated back bolt has also emerged, which adopts a unique double step stress design and dual safety assurance. The top groove adopts thread engagement, which can effectively prevent the screw from loosening; The product is wrapped in red nylon and has good corrosion resistance and high recognition.

APPLICATION AREAS

1. PRT prefabricated back bolts have redefined the stress model of artificial board dry hanging, making calculations rule-based.
2. The unique double cone design enables the plate to have better tensile and shear properties.
3. The whole body is wrapped in red engineering nylon, with stronger anti-corrosion performance.
4. Multi specification product customization ensures more scientific implementation of the project.

PRODUCT INSTALLATION

Unique product design, easy and fast installation.
Just pay attention to whether the red surface is flush with the board to install it in place.
During transportation, the plates can be stacked on top of each other, with zero damage.
Simply select the correct screw and burial depth for safe installation.





PRODUCT SPECIFICATIONS

Model	Panel thickness T(mm)	Burial depth of back bolt Hs(mm)	Screw Diameter R(mm)	Item No.		Package Quantity
				Silv	Red Nylon	
T-PRT/A4 M6*12	20	13	6	202 111 003	202 001 111	450
T-PRT/A4 M6*15	25	16	6	202 111 004	202 001 112	450
T-PRT/A4 M6*20	30	21	6	202 111 005	202 001 113	400
T-PRT/A4 M8*12	20	13	8	202 111 013	202 001 114	300
T-PRT/A4 M8*15	25	16	8	202 111 014	202 001 115	300
T-PRT/A4 M8*20	30	21	8	202 111 015	202 001 116	200
T-PRT/A4 M8*30	40	32	8	202 111 016	202 001 117	200
T-PRT/A4 M10*30	50	33	10	202 111 023	202 001 118	100
T-PRT/A4 M10*40	≥60	43	10	202 111 024	202 001 119	50

T-PP Type (handheld)

PRODUCT DESCRIPTION

The sleeve is machined from high-quality carbon steel.
The socket mouth is equipped with double teeth for easy fixation of the back bolt.
Surface treatment, blackening or galvanizing.
Lightweight, durable, safe and convenient.



APPLICATION AREAS

Fixation and fixation of the back-bolt sleeve.

Product specifications	Total length L(mm)	Height H(mm)	Item No.	Package Quantity
T-PP-7	100	6	220 214 207	10
T-PP-9	100	12	220 214 209	10
T-PP-11	100	12	220 214 211	10
T-PP-13	100	12	220 214 213	5
T-PP-14	100	15	220 214 214	5

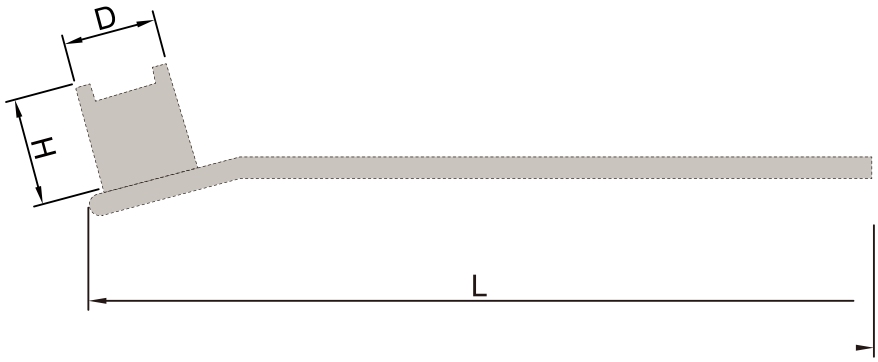

T-THT (Limit Type)

PRODUCT DESCRIPTION

Limited position mark in the middle of the screw.
The screw is automatically locked into the back-bolt sleeve to avoid piercing the panel.
Protection panel, safe and convenient.



APPLICATION AREAS

Suitable for panels with ultra-thin, ultra-soft, loose texture, and multiple holes.

Model	Total Length L(mm)	Limiting width H(mm)	Implantation Depth	Item No.	Package Quantity
THT/A4 M5*15	15	3	6	610 515	800
THT/A4 M5*20	20	3	6	610 520	800
THT/A4 M5*25	25	3	6	610 525	800
THT/A4 M6*20	20	3	9	620 209	500
THT/A4 M6*25	25	3	9	620 259	500
THT/A4 M6*30	30	3	16	620 316	500
THT/A4 M6*35	35	3	16	620 335	500
THT/A4 M8*30	30	3	16	820 330	400
THT/A4 M8*40	40	3	16	820 340	300
THT/A4 M8*50	50	3	16	820 550	200

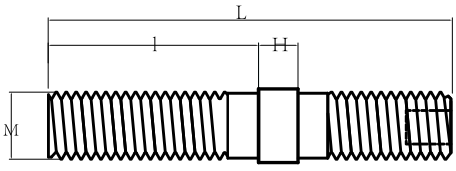

HOW TO CHOOSE EPOXY ADHESIVE?

Firstly, choose the appropriate epoxy product. The market is full of epoxy products, and it is not easy for the purchaser to choose the correct product.
One option is to choose epoxy products from TOPIN GROUP, and the other is to choose products from reputable manufacturers.
When using, prepare the epoxy adhesive strictly according to the user manual.
When injecting glue, note that the amount used in the back-bolt hole is approximately 50% of the hole depth.

Usage Process

1. After drilling the back-bolt hole, check for impurities inside the hole.
2. Inject approximately 50% of the fully mixed epoxy product into the hole.
3. Install the back-bolt head and screw.
4. Just install the aluminum alloy pendant.

Item Number	Product	Reference	Serial Number	Volume Unit
1	Special epoxy adhesive for injection back bolt	TP-200	410 128 450	450ml
2	Special epoxy adhesive for injection back bolt	TP-202	410 128 050	50ml



INSTALLATION INSTRUCTIONS

Drilling and Reaming

1. It is recommended to use TOPIN tool system for drilling holes on the back of the board, which should be carried out in the factory.
2. TOPIN tool system includes: TOPIN back bolt, TOPIN hole tester, drill bit, and rear cutting hole expanding machine (such as handheld drill, platform drill, and adhesive automatic drill).
3. According to the requirements, drill straight holes first and then expand bottom holes.
4. Whether the back bolt can be installed correctly depends on the accuracy of the drilling hole.
5. The standardization of hole formation is regularly checked by a TOPN hole tester with the same anchoring depth and geometric shape hole. Root of drilling depth
   According to the hole measuring instrument, the main diameter of the expansion hole can be detected through it.

Installation method of TOPIN back bolt

1. The correct installation of the screw-in back bolt depends on the accuracy of the reaming, and strict testing of the anchoring depth and the diameter of the reaming hole should be carried out.
2. The length of the back-bolt sleeve and screw must match the required hole depth and the selected hanging parts. Only with a unified matching can the installation be fast, simple, and safe.
3. Before installation is completed, confirm that the correct installation tool is used for installation, and then use a testing device to ensure that the inserted part of the screw and the back-bolt sleeve are fully aligned and expanded in place.
4. Insert the back-bolt sleeve, gently press on the hanging piece, and slowly screw in the screw to the bottom to expand the back bolt to its set size and into the expanded hole.
5. Screw on and tighten the stop nut to complete the connection between the pendant and the back bolt.
6. Strictly adhere to design and usage standards.

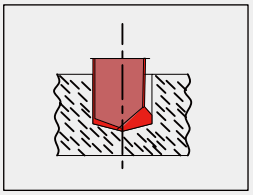

Drilling

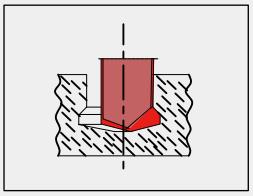

Undercutting

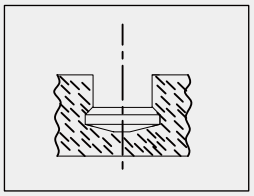

Dimension measurement

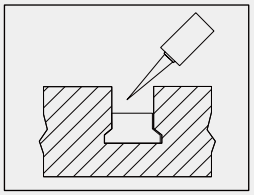

Plastic injection about 50%

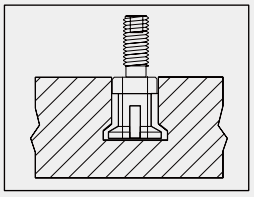

Anchorage

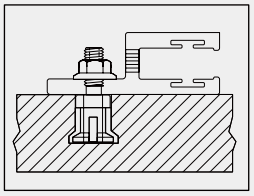

component


E TA


CE


TQCSI
Quality Certified
Certificate of Registration
UK TOPIN COMPANY LIMITED
Rm101,Maple house,118 High street,Purley,London England
Quality Management System
ISO 9001:2008
Sean Bates
Accreditation Manager
TQCS International Pty Ltd
JAS-ANZ
IAF


United States of America
United States Patent and Trademark Office
TOPIN
Reg. No. 5,118,512
Registered Jan. 10, 2017
Int. Cl.: 6
Trademark
Principal Register


ITB
INSTYTUT TECHNIKI BUDOWLANEJ
European Technical Assessment
ETA-20/0889
of 30/12/2020
General Part


CSTB
le futur en construction


QUALITY ASSURED FIRM
ISO
9001
CQC

Intertek



Certificate – Сертификат – 證明書 – Certificat – 증명서 – شهادة

Certificate of Compliance

No. 0P160420.ITUD43

Technical Construction File no. FCSH1603247404

Certificate's Holder: TOPIN (SHANGHAI) INTERNATIONAL TRADE CO., LTD.
1F,G Building, No. 2038 Taihe Rd, Baoshan Shanghai China

Certification ECM Mark:

Product: Model(s): TOPIN ANCHORAGE STEEL CHANNEL AND BOIT
40/22-300、40/22-350、50/30-300、50/30-350、52/34-300、52/34-350、38/23-300、38/23-350

Verification to: Standard:
BS EN 15048-1:2007

related to CE Directive(s):
R 305/2011 (Regulation for the Marketing of Construction Products)

Remark: The product(s) has been verified on a voluntary basis. The product(s) satisfies the requirements of the Certification Mark of ECM, in reference to the above listed Standard(s). The above Compliance Mark can be affixed on the product(s) accordingly to the ECM regulation about its release and its use. The regulation can be found at www.entecerma.it. The Certificate of Compliance can be checked for validity at www.entecerma.it
This verification doesn't imply assessment of the production of the product(s).

Additional information, clarification about the CE Marking:
We attest that a TCF for the CE Marking process is in place. Whereas the Manufacturer is Responsible to start the CE Marking Certification Procedure through an appointed Notified Body and the perform all the necessary activities, as required by the Directive and accepted by the Notified Body, before placing the CE Mark on the product(s).

Date of issue 30 April 2014 — Chief Manager Eric Mahon

Expiry date 19 April 2021 — Deputy Manager Vicki Miller

Ente Certificazione Macchine Srl
Via Ca' Bella, 243 – Loc. Castello di Serravalle – 40053 Valsamoggia (BO) - ITALY
+39 051 6700141 +39 051 6700156 info@entecerma.it www.entecerma.it



EUIPO
EUROPEAN UNION INTELLECTUAL PROPERTY OFFICE

EUROPEAN UNION INTELLECTUAL PROPERTY OFFICE
CERTIFICATE OF REGISTRATION

This Certificate of Registration is hereby issued for the European Union trade mark identified below. The corresponding entries have been recorded in the Register of European Union trade marks.

AMT DER EUROPÄISCHEN UNION FÜR GEISTIGES EIGENTUM
EINTRAGUNGSURKUNDE

Diese Eintragungsurkunde wird für die unten angegebene Unionsmarke ausgestellt. Die betreffenden Angaben sind in das Register der Unionsmarken eingetragen worden.

www.euipo.europa.eu

Registered / Eingetragen 15/09/2016

No 015494602

TOPIN

The Executive Director / Der Exekutivdirektor

António Campinos

TOPIN®

PROJECT CASES











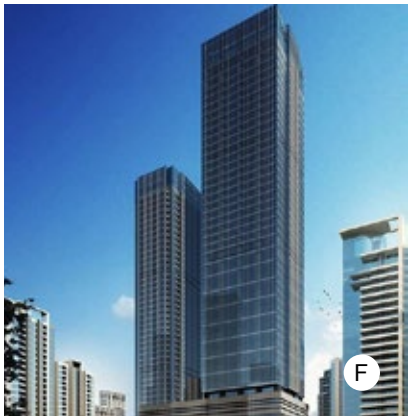

A Project name: NEO Bankside
Place: London, UK
Client: GC Bankside LLP (a Joint Venture between Native Land and Grosvenor)
Residential + Office Area: 28,600m2
Main Contractor: Carillion Plc

B Project name: Reconstruction of Phoenix Contact No. 1 Warehouse
Place: Netherlands
Client: Heijmans Vastgoed
Residential + Office Area: 23,000m2
Main Contractor: Heijmans Woningbouw

C Project name: BMW Group Pavilion
Place: London, UK
Client: BMW Group UK
Residential + Office Area: 480 m2
Architect: Serie Architects

D Project name: Forest Road Youth Center
Place: London, UK
Residential + Office Area: 18,000m2
Architect: Matthew Lloyd Architects

E Project name: Moneypenny Headquarters
Place: London, UK
Client: Moneypenny
Residential + Office Area: 8454 m2
Main Contractor: Pochin's Ltd

F Project name: Lanzhou Jinkairui Building 200 M
Place: China

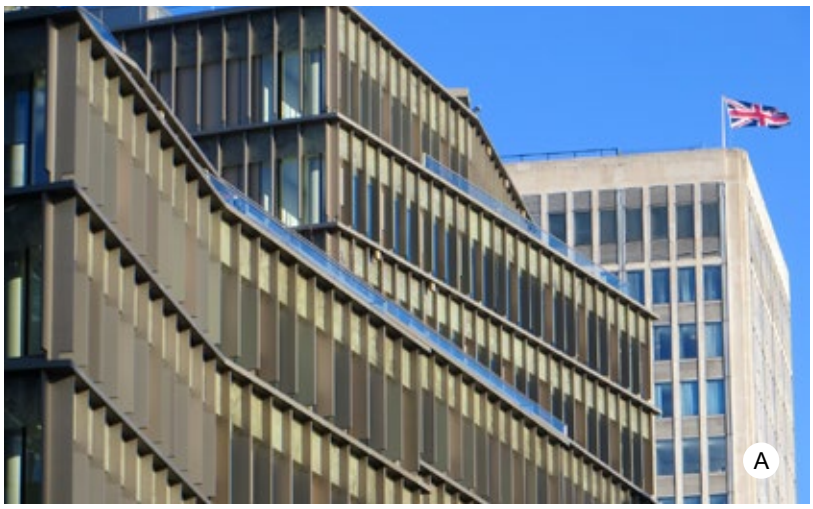

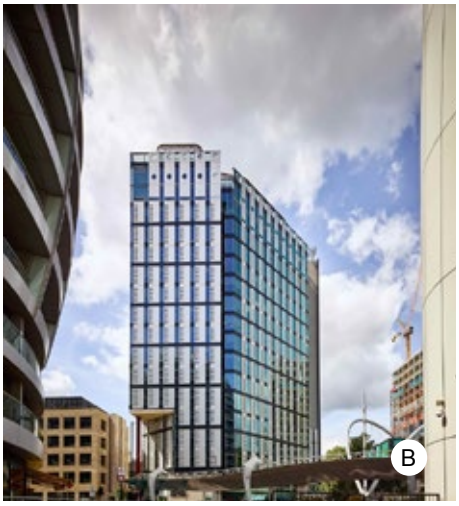







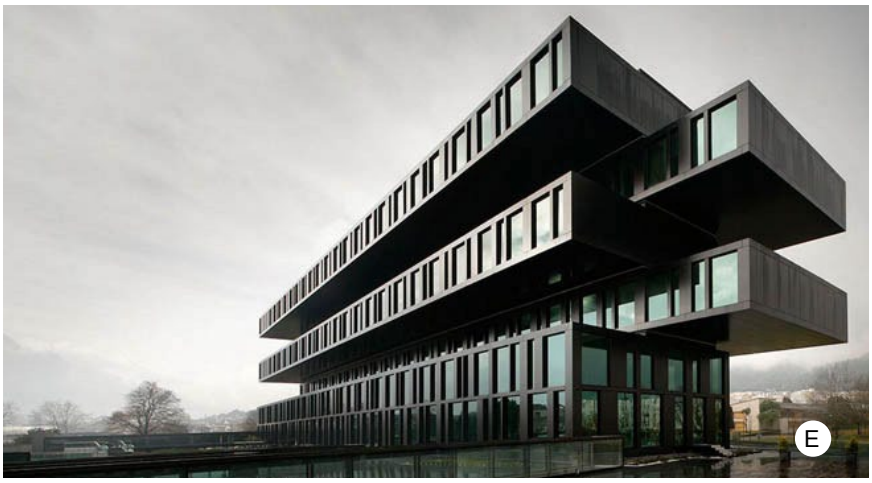

A Project name: Zigzag building
Place: London, UK
Client: Land Securities
Residential + Office Area: 3350 m2
Architect: Lynch Architects

B Project name: White Collar Factory
Place: London, UK
Client: Derwent London
Residential + Office Area: 22,000 m2
Main Contractor: Multiplex

C Project name: Forbury Place
Place: Reading, UK
Client: Arkoni
Residential + Office Area: 18,500 m2
Architect: Aukett Swanke

D Project name: Victoria Gate
Place: Leeds, UK
Client: BCM GRC
Residential + Office Area: 26,000 m2
Architect: ACME

E Project name: Axis Viana Hotel
Place: Soeat, Netherlands
Architect: VHM

F Project name: Guangzhou Vanke Building
Place: China













A Project name: Reforma Diana Tower
Place: Mexico City
Client: BCM GRC
Residential + Office Area: 33,000 m2
Architect: Arditti + RDT arquitectos

B Project name: University of Tarudant
Place: Tarudant, Morocco
Residential + Office Area: 20,511 m2
Main Contractor: Entreprise Zerkdi & Fils

C Project name: Primary School, 333 Kingsland Road, Hackney
Place: London
Residential + Office Area: 8,500 m2
Main Contractor: Thornsett Structures

D Project name: Compton&Edrich Stand
Place: London
Client: Marylebone Cricket Club(MCC)
Residential + Office Area: 11,500 m2
Main Contractor: ISG

E Project name: Primary School, 333 Kingsland Road, Hackney
Client: F&C Property Asset Management
Place: London
Architect: Wilkinson Eyre

F Project name: Rehabilitation of Battersea Power StationPlace: London
Residential + Office Area: 32,500 m2
Architect: WilkinsonEyre













A Project name: 10 New Burlington Street
Client: Exemplar Properties
Place: London
Main Contractor: Keltbray Group

B Project name: Burntwood School
StationPlace: London
Residential + Office Area: 12,800 m2
Architect: Allford Hall Monaghan Morris

C Project name: Shanghai Pudong
Financial Plaza
Place: China

D Project name: Chongqing Jiangbei
International Airport Terminal T3B
Owner: China

E Project name: Zara. Com office area
Place: Arteixo, Spain
Residential + Office Area: 61,000 m2
Main Contractor: Goa Invest

F Project name: Clichy-Batignolles
Place: Paris, France
Residential + Office Area: 11,740 m2
Main Contractor: EQUITONE













A Project name: AH McCoy Federal Office
Place: JACKSON, USA
Residential + Office Area: 39,750 m2
Architect: Schwartz Silver

B Project name: HAUT Amsterdam Residential Building
Place: Paris, France
Residential + Office Area: 14,500 m2
Main Contractor: J.P. van Eesteren

C Project name: KOSMOS Bread&Coffee Shop
Place: NAFPLION, Greece
Residential + Office Area: 800 m2
Architect: Studio 2Pi Architecture

D Project name: Mongyudowondo Building
Place: Gangnam-gu, Korea
Residential + Office Area: 5,007 m2
Main Contractor: UnSangDong Architects

E Project name: Valletta City Gate
Place: Valletta, Malta
Residential + Office Area: 14,000 m2
Contractor: Astec
Architect: Renzo Piano Building Workshop

F Project name: Paris Complex
Place: Paris
Residential + Office Area: 5,180 m2
Main Contractor: MUOTO



A Project name: Egypt's New Administrative Capital CBD
Place: Egypt
Residential + Office Area: 124,000 m2
Contractor: CSCEC



Topin company owns the copyright, rights reserved.

TOPIN®

UNDERCUT TECHNOLOGY

TOPIN GROUP
TOPIN INDUSTRY(UK)LTD

www.topingroup.uk info@topingroup.uk
+44(203) 7699941