VINCO

PRODUCT BROCHURE

VINCO ALUMINIUM PVT LTD

VINCO ALUMINIUM PVT LTD

ABOUT US

A leading force in the aluminum industry, Vinco Aluminium Pvt. Ltd. announces a revolution in the crafting of aluminum products, with their advent. Having opened their doors to the world just recently, the owners of Vinco Aluminium Pvt.Ltd. come with unmatched zeal and confidence. With the goal of becoming one of the leaders in aluminum products manufacturing companies, we are dedicated to innovation and a relentless commitment to quality.

Vinco Aluminium established in 2023, an ISO certified company at Howrah, West Bengal in eastern region of India. We are one of the leading Manufactures of the various kind of Aluminium Extruded profile or products which monthly production capacity 750 MT per month, having three press of 700 MT, 1000MT, 1500MT. We are focusing over all segment with 1xxx series to 7xxx series alloys with best possible competitive price with good quality of products.

We are capable of delivering premium quality aluminium extrusion products in different alloys that comply with international quality standards. Our technical advancement integrated with our field knowledge & engineering allows us to develop innovative products to meet customer specific requirement.

COMPANY OVERVIEW:

COMPANY	:	**VINCO ALUMINIUM PVT.LTD.**
HEAD OFFICE	:	Acropolis, Unit-16/4.1858/1 , Rajdanga Road, 15th Floor, Kol 107
WORKS	:	G44J, FV9, NH-6, Khalsani, Kalitala, Howrah-711307, West Bengal
CERTIFIED	:	ISO 9001: 2015 Certified company.
MANUFACTURE	:	ALUMINIUM EXTRUDED PROFILE (ROD/BAR/ANGLE/TUBE/SEMI HOLLOW/HOLLOW /PROFILES etc.)
CAPACITY	:	750 MT / MONTH
ALLOY	:	1XXX TO 7XXX SERIES
BILLET USE	:	NALCO GRADE IE-07 & INHOUSE CASTING
NEW DIE	:	PREPARED WILL BE ≤ 20 DAYS DEPEND ON DFR
ORDER MATERIAL	:	DELIVERY ON COMINMENT DATED ± 3 DAYS
PROFILE	:	CCD 154 mm MAX
IN-HOUSE INFRASTRUCTURE FACILITIES	:	**1. Melting Furnace -** 3.5 Ton / 9 Ton / 10 Ton **2. Extrusion Press -** 4" (700mt) / 5" (1000mt) / 6" (1500mt) **3. Tool Room -** Auto Cad / Band Saw / Turning / Vmc / Milling / Tapping / Hardening /wire Cut / Edm / Sizing / Vmc / Drilling / Surface Grinder/ Polishing /nitriding **4. Ageing Furnace -** 10 Ton 2 Nos **5. Anodizing-** Electro Color / Silver / Black **6. Powder Coating -** Gloss / Matt / Satin **7. Qc Lab -** Spectrometer / Vickers Hardness Tester / Utm / Webster / Micron Meter / Conductivity Meter /vernier / Micro Meter/ Measuring Tape / Right Angle / Bevel Protector / Right Angle / Feeler Gauge Etc.
DOCUMENT	:	TEST CERIFICATE & PRE DISPATCH INSPECTION REPORT PROVIDE CUSTOMER WISE.
PACKING	:	HDPE / LLDP /STRECH / PET STRAP etc PROVIVE CUSTOMER WISE
MD	:	Mr. Rajesh Shrivastava
DIRECTOR	:	Mr. Shikhar Shrivastava
ESTABLISHED IN	:	2023

VINCO ALUMINIUM PVT LTD

PROCESS FLOW CHART:

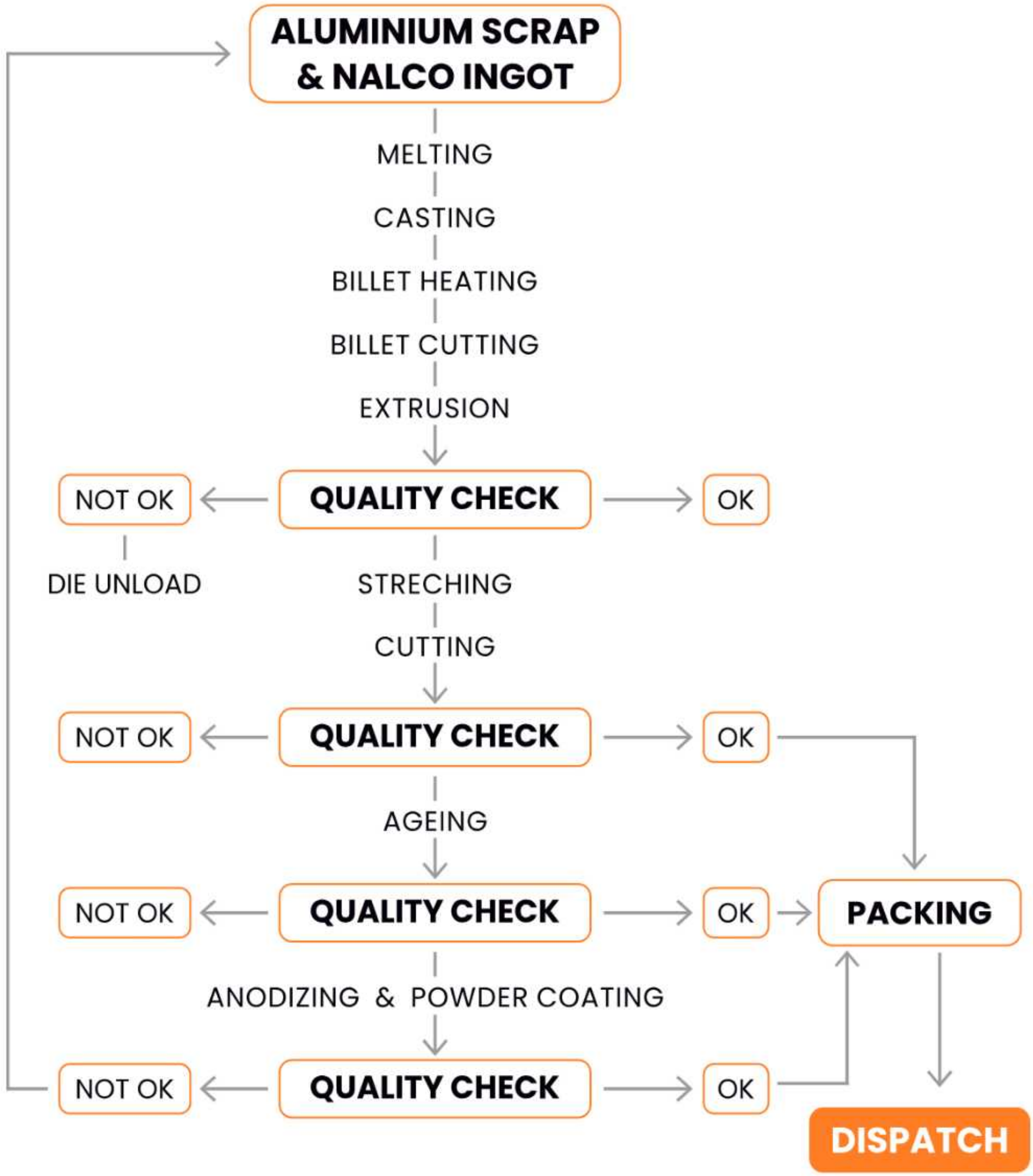

MOST SUPPLY MATERIAL:

VINCO ALUMINIUM PVT LTD

Vinco	CASTING PARAMETERS									
COLOUR CODE	ALLOY	% Si	%Mg	%Mn	%Fe	%Zn	%Cr	%Cu	%Ti	%Al
6063	*STD. B221*	*0.20-0.60*	*0.45-0.90*	*≤0.10*	*≤0.35*	*≤0.10*	*≤0.10*	*≤0.10*	*≤0.10*	*≥97.70*
	VINCO 6063	0.40-0.45	0.50-0.55	-	0.30-0.35	-	-	-	-	≥98.00
6061	*STD. B221*	*0.40-0.80*	*0.80-1.20*	*≤0.15*	*≤0.70*	*≤0.25*	*0.04-0.35*	*0.15-0.40*	*≤0.15*	*≥96.50*
	VINCO 6061	0.55-0.60	0.85-0.90	-	0.25-0.30	-	0.10	0.16-0.20	-	≥97.80
6351	*STD. B221*	*0.70-1.30*	*0.40-0.80*	*0.40-0.80*	*≤0.50*	*≤0.20*	-	*≤0.10*	*≤0.20*	*≥96.50*
	VINCO 6351	0.90-1.00	0.55-0.58	0.43-0.48	0.25-0.30	-	-	-	-	≥97.60
1060	*STD. B221*	*≤0.25*	*≤0.03*	*≤0.03*	*≤0.35*	*≤0.05*	...	*≤0.05*	*≤0.03*	*≥99.50*
	VINCO 1060	-	-	-	0.10-0.15	-	-	-	-	≥99.70
6082	*STD. B221*	*0.70-1.30*	*0.60-1.20*	*0.40-1.00*	*≤0.50*	*≤0.20*	*≤0.25*	*≤0.10*	*≤0.20*	*≥96.50*
	VINCO 6082	0.95-1.10	0.70-0.75	0.53-0.58	0.25-0.30	-	-	-	-	≥97.10

** NOTE : CHEMICAL COMPOSITION MAINTAIN AS PER CUSTOMER REQUIRMENT STANDARD (ASTM B221 , EN 573 , IS 733 etc.)

SL.NO	ALLOY	STANDARD	MECHANICAL PROPERTIES					
			Temper	Std/found	UTS	PS	%E	HARDNESS (HBW)
1	EN AW - 6063	EN-755	T6	Min Mpa	195	160	8	65
	6063	VINCO	T6	Found	215	175	10	70-75
2	EN AW - 6061	EN-755	T6	Min Mpa	260	240	8	95
	6061	VINCO	T6	Found	310	280	12	95-98
3	EN AW -1050	EN-755	F	Min Mpa	60	20	25	20
	1060/1050	VINCO	F	Found	85	35	31	25-30
4	EN AW-6351	EN-755	T6	Min Mpa	295	250	6	95
	6351	VINCO	T6	Found	331	290	9	95-97
	EN AW-6351	EN-755	T5	Min Mpa	270	230	8	90
	6351	VINCO	T5	Found	331	290	9	90-91
	EN AW-6351	EN-755	T4	Min Mpa	205	110	12	67
	6351	VINCO	T4	Found	238	150	15	68-70
5	EN AW-6082	EN-755	T6	Min Mpa	310	260	6	95
	6082	VINCO	T6	Found	333	287	10	95-99

**NOTE: MECHANICAL PROPERTIES MAINTAIN AS PER CUSMER REQUIRMENT STANDARD (ASTM B221 , EN 755 , IS 733 etc.).

VINCO ALUMINIUM PVT LTD

TERM & CONDITION:

MINIMUM ORDER	300 Kgs / Specification (Lot)
LENGTH	1000mm to 6096 mm ± 5 mm
RANDOM LENGTH	1500 mm to 4876 mm ± 5mm
WEIGHT	The weight per 3.66 meter length given in this catalogue is the nominal weight and should be treated as per tolerance and alloy determines the actual weight of the section.
DIMENSION AND TOLERANCES	Sections will be supplied as per standard (IS: 3965 , IS: 6477 , IS: 2673) dimensional tolerances. Although the dimensions have been indicated in the catalogue
SHIPPING TOLERANCES	± 10 % of Order Quantity
HOW TO ORDER	Section Name / Alloy Temper /Finish / Cut Length (mm) /Weight Range (kg/mtr) / Quantity (kgs) / Packing Mode / Standard.

ACTIVITIES :

VINCO ALUMINIUM PVT LTD

HARDNESS TEST

UTS TEST

MEDICAL CAMP

TRAINING

VINCO ALUMINIUM PVT LTD

SECTION. NO. - 22740 WT. - 1.350 kg/ 12'

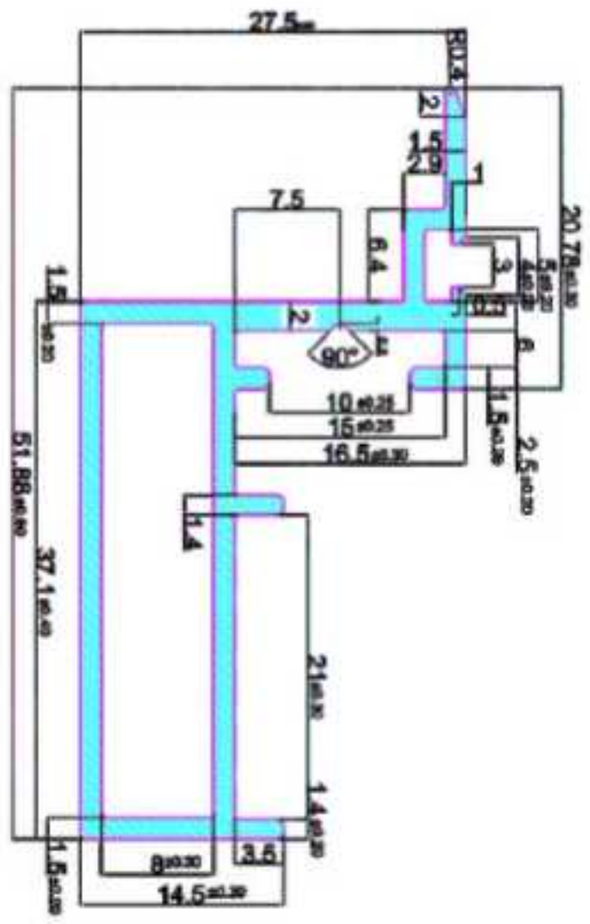

SECTION. NO. - 22843 WT. - 7.200 kg/12'

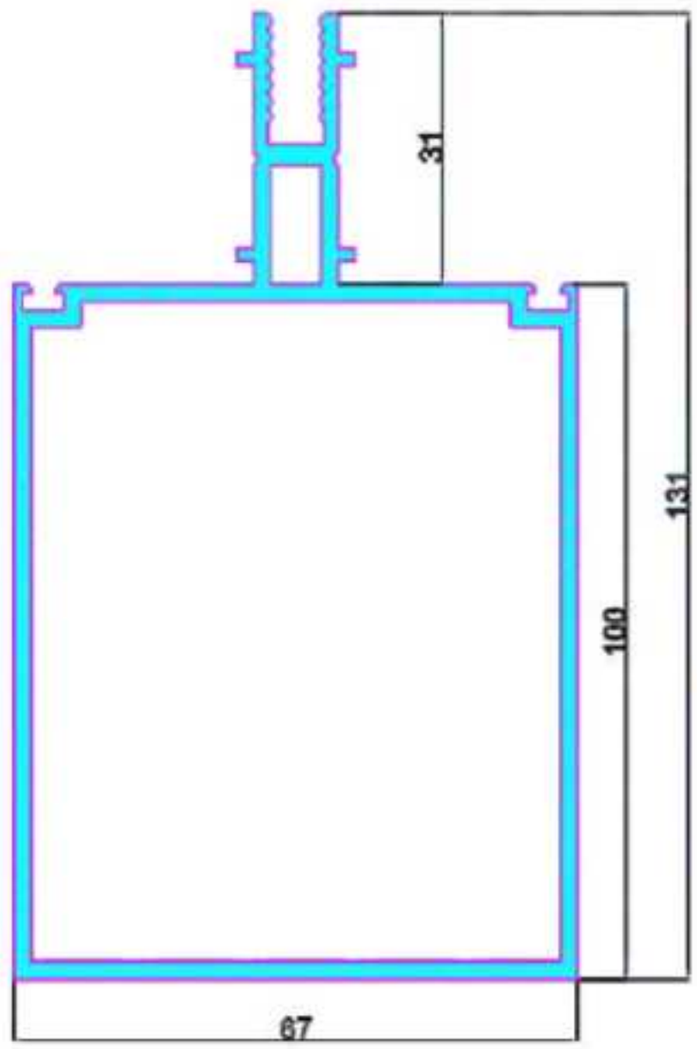

SECTION. NO. - 29073 WT. - 1.041 kg/12'

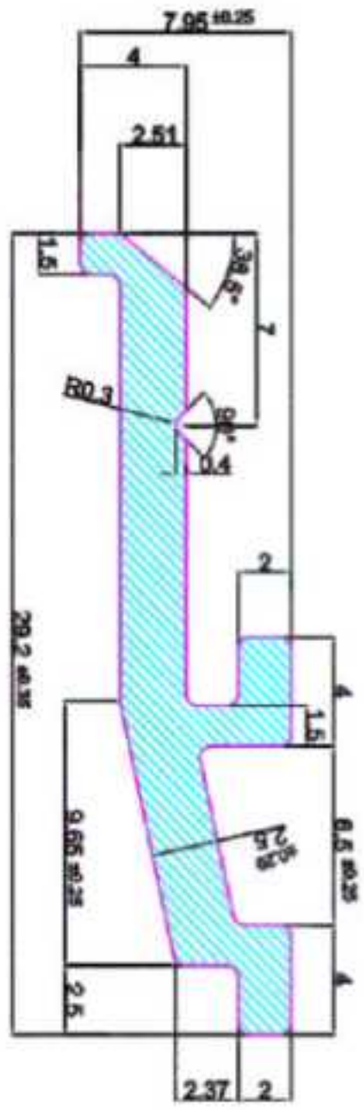

SECTION. NO. - VC - 30167 WT. - 0.250 kg/12'

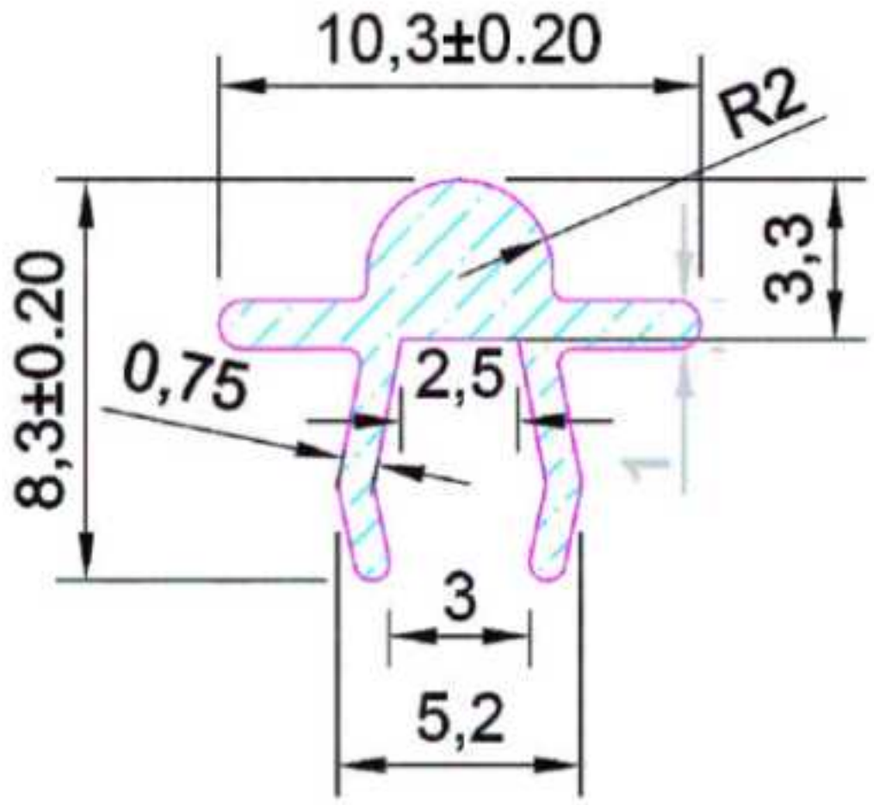

***ALL DIMENSION IN MM, CUT LENGTH IN FOOT AND WEIGHT RANGE IN KGS

VINCO ALUMINIUM PVT LTD

SECTION. NO. - 22727 WT. - 8.366 kg/ 12'

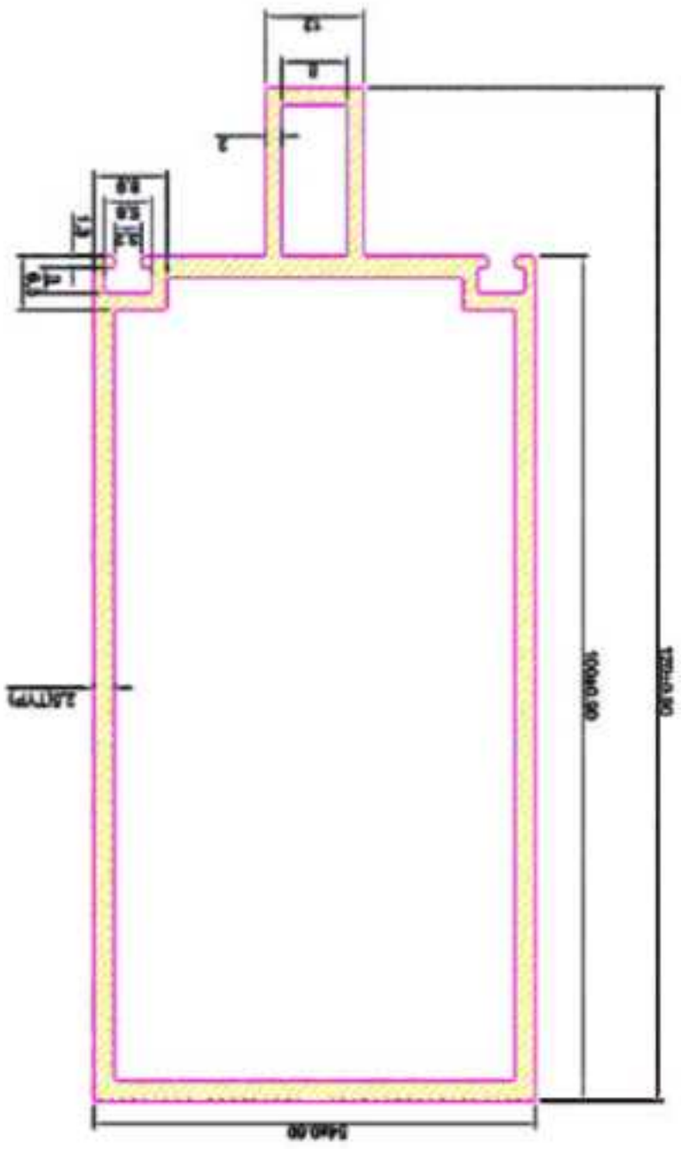

SECTION. NO. - 22736 WT. - 5.200 kg/12'

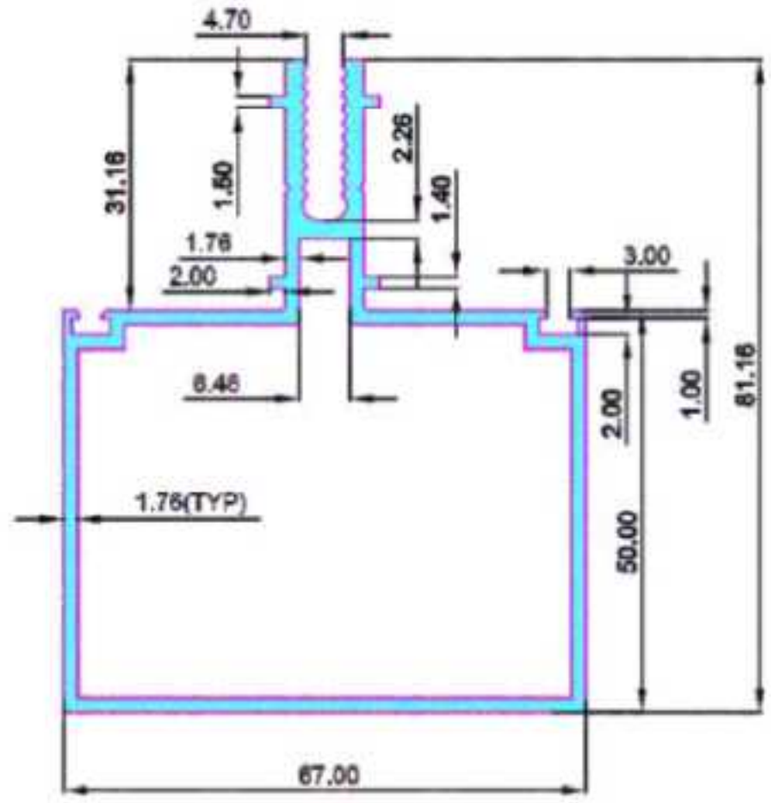

SECTION. NO. - 22738 WT. - 4.800 kg/12'

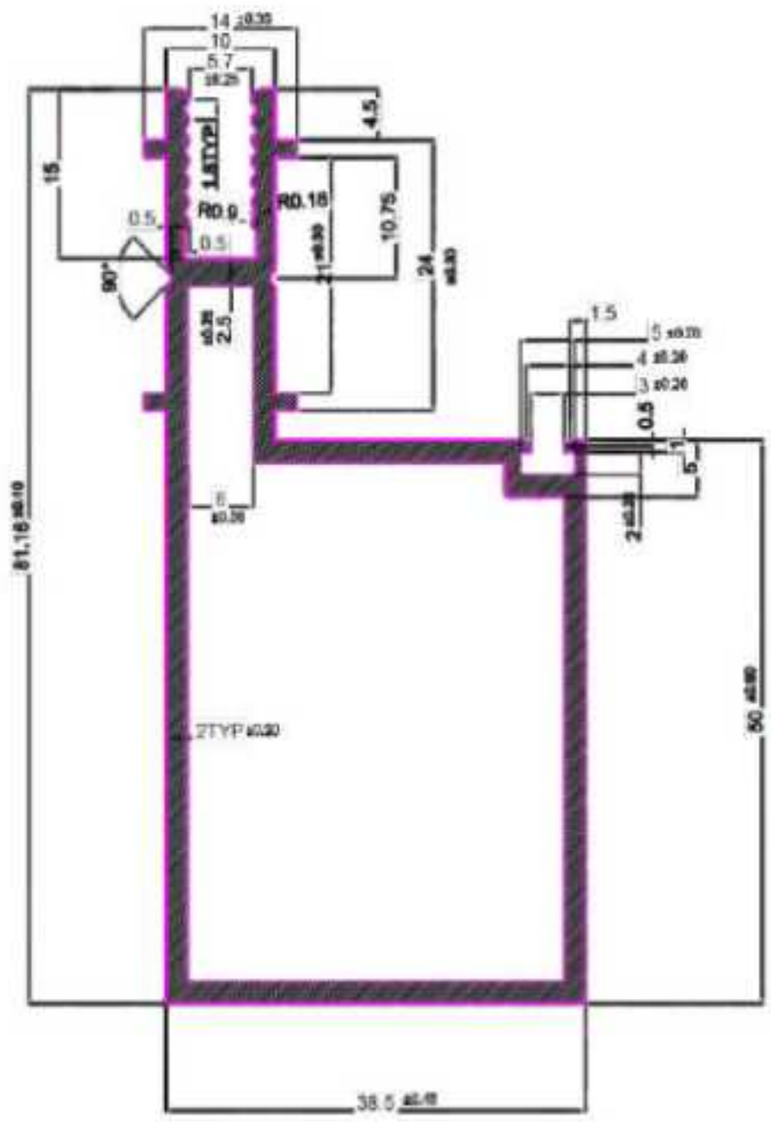

SECTION. NO. - 22739 WT. - 6.700 kg/12"

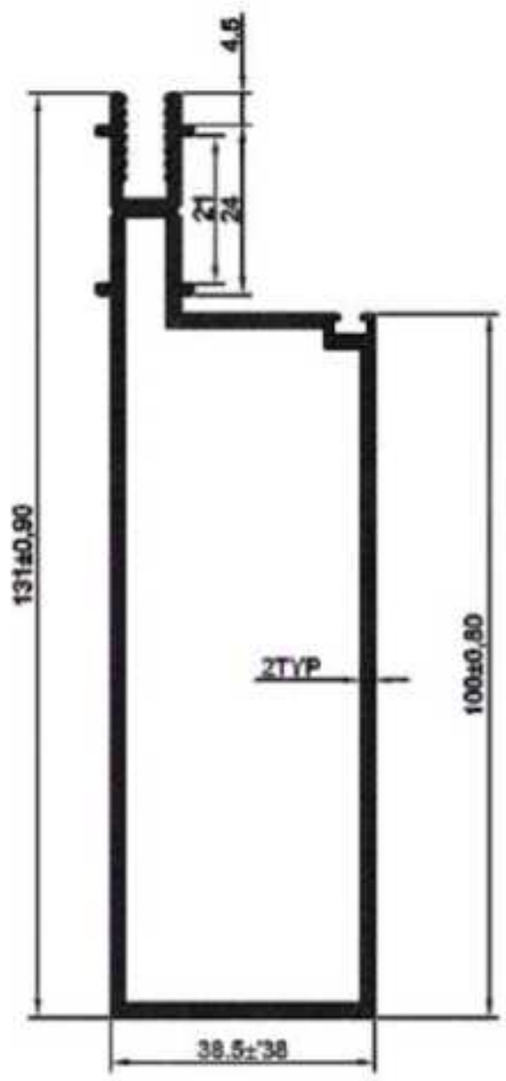

***ALL DIMENSION IN MM, CUT LENGTH IN FOOT AND WEIGHT RANGE IN KGS

VINCO ALUMINIUM PVT LTD

SECTION. NO. - 21469 WT. - 5.980 kg/ 12'

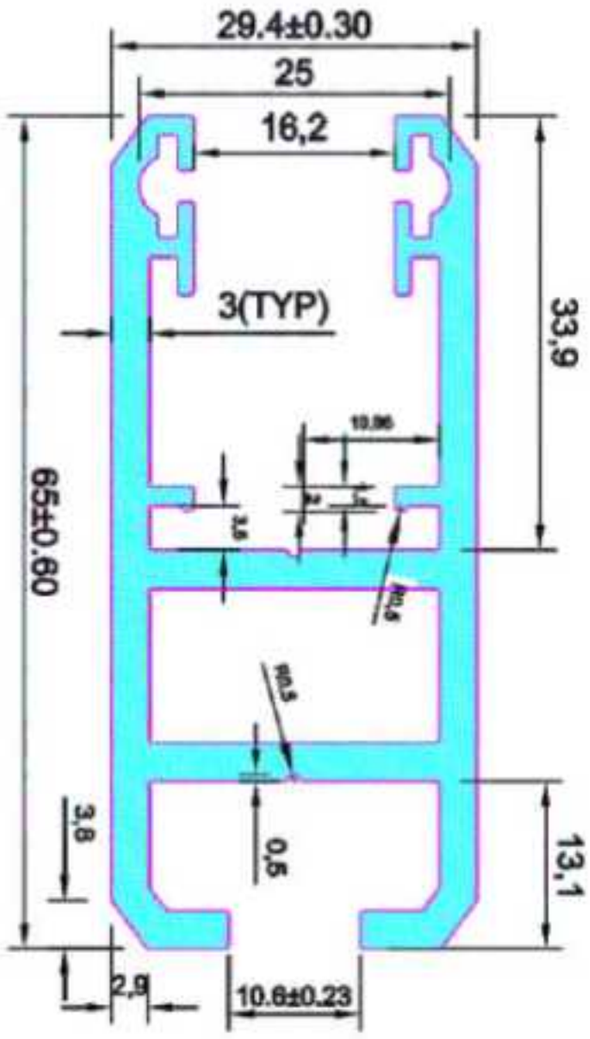

SECTION. NO. - 21477 WT. - 4.557kg/12'

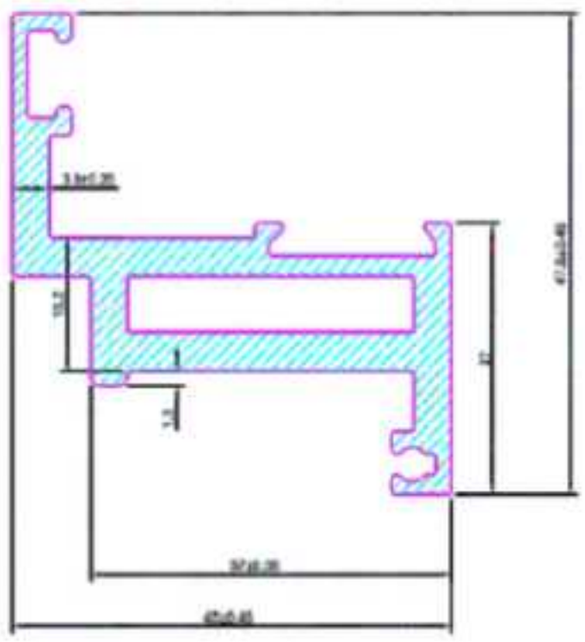

SECTION. NO. - 21479 WT. - 14.029 kg/12'

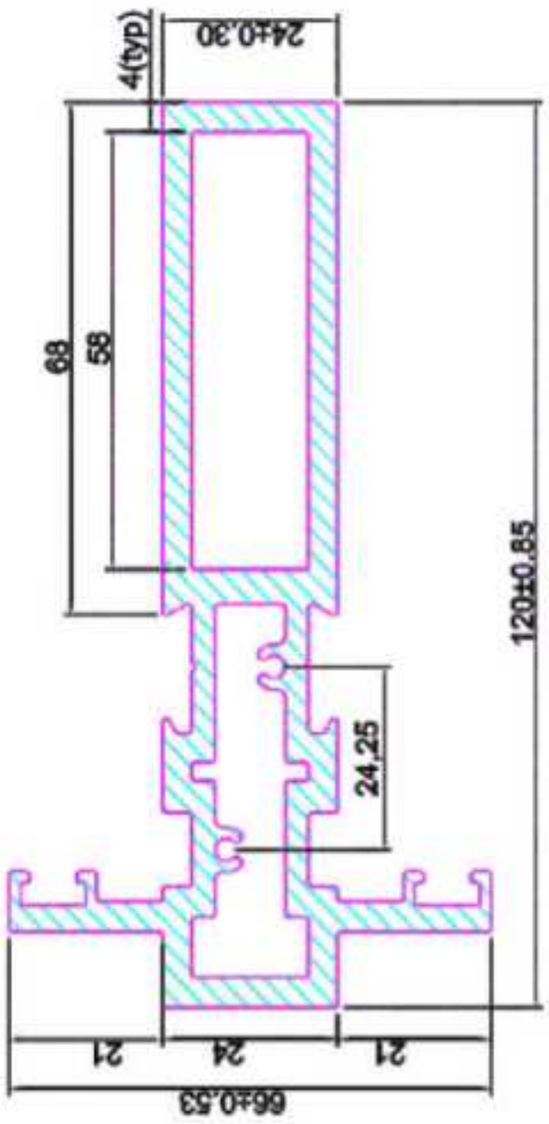

SECTION. NO. - 22711 WT. - 1.580 kg/12"

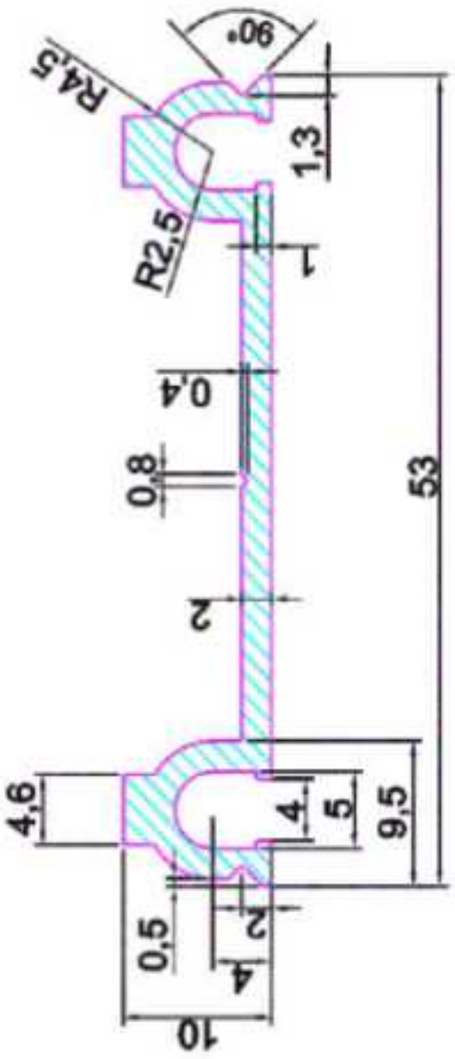

***ALL DIMENSION IN MM, CUT LENGTH IN FOOT AND WEIGHT RANGE IN KGS

VINCO ALUMINIUM PVT LTD

SECTION. NO. - 20777 WT. - 2.00 kg/ 12'

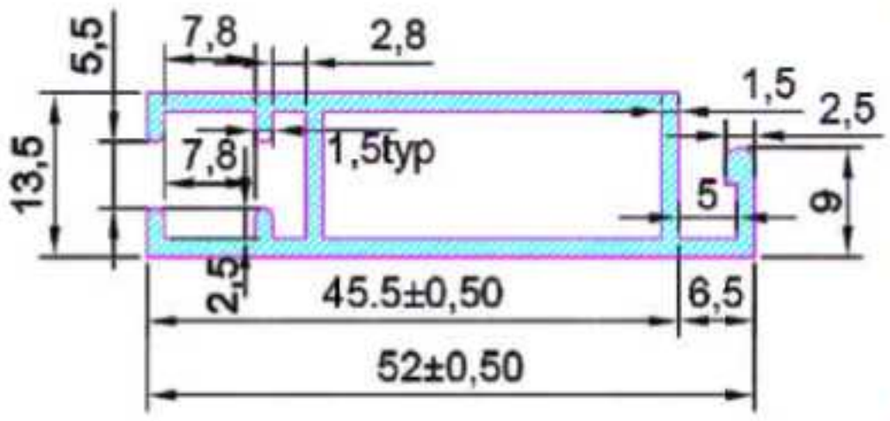

SECTION. NO. - 21104 WT. - 2.740 kg/12"

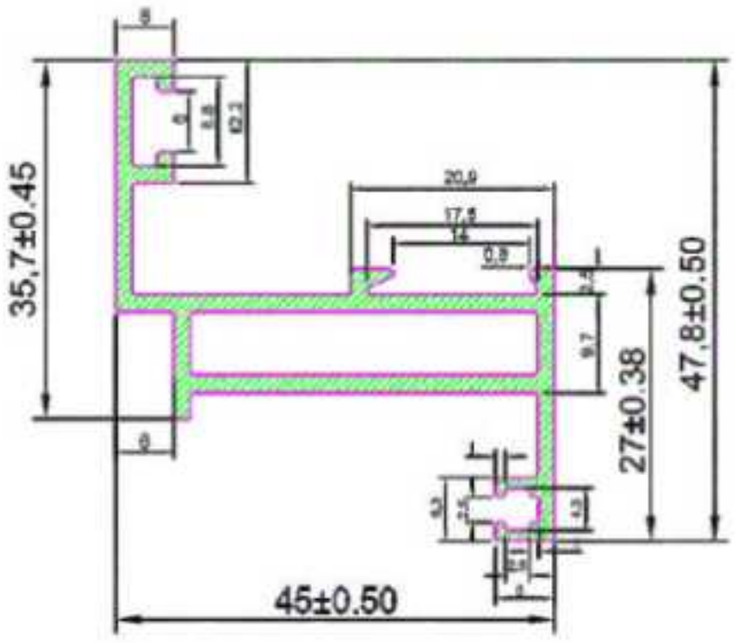

SECTION. NO. - 21226 WT. - 5.192 kg /12'

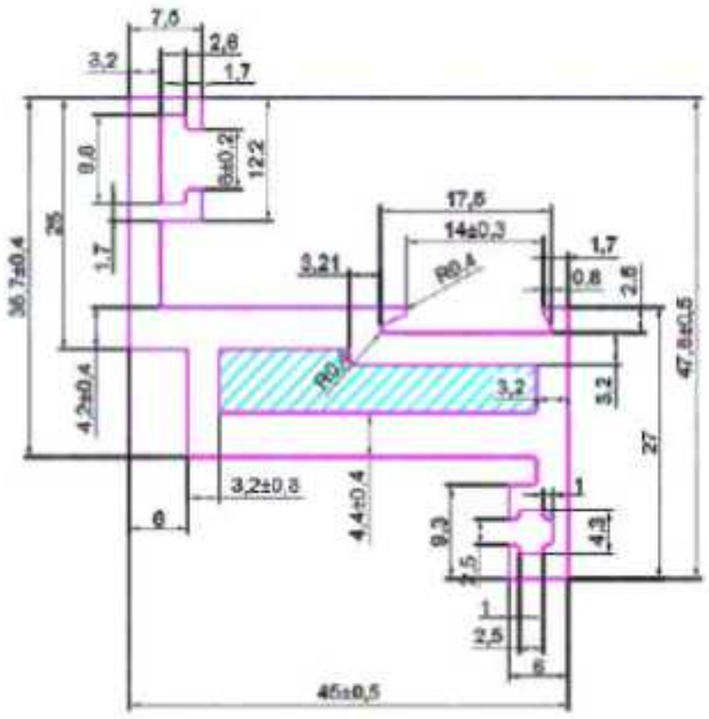

SECTION. NO. - 21227 WT. - 6.730 kg/12"

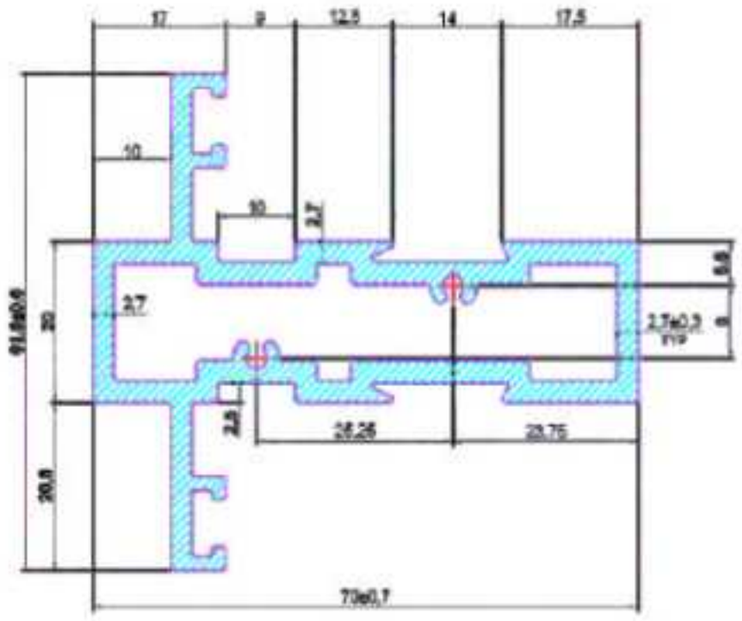

SECTION. NO. - 21228 WT. - 5.287 kg/ 12'

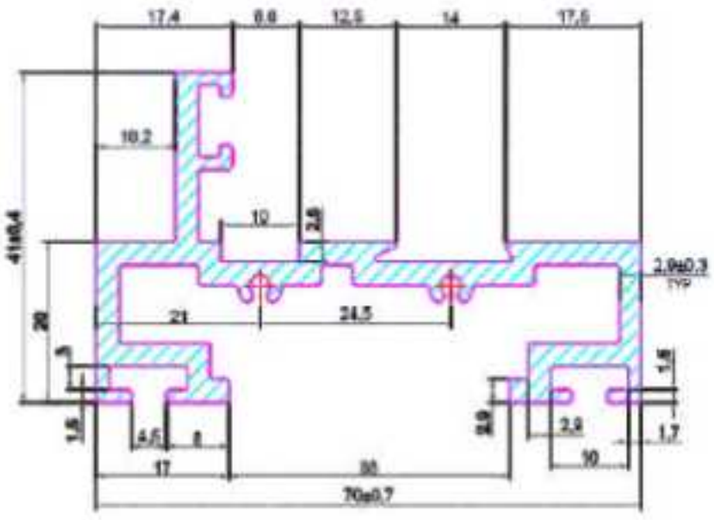

SECTION. NO. - 21274 WT. - 6.860 kg/12"

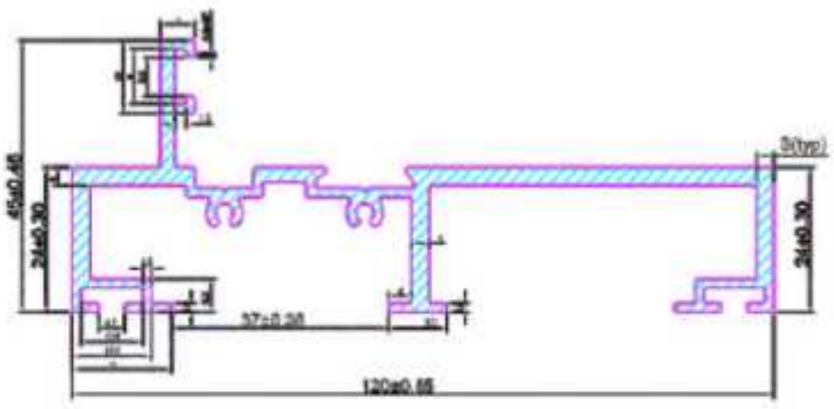

***ALL DIMENSION IN MM, CUT LENGTH IN FOOT AND WEIGHT RANGE IN KGS

VINCO ALUMINIUM PVT LTD

SECTION. NO. - 12820 WT. - 1.369 kg/12

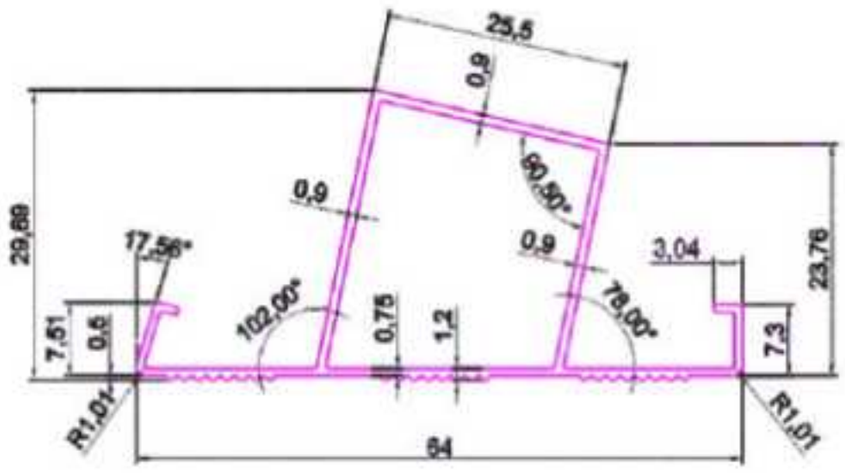

SECTION. NO. - 19411 WT. - 1.600 kg/12

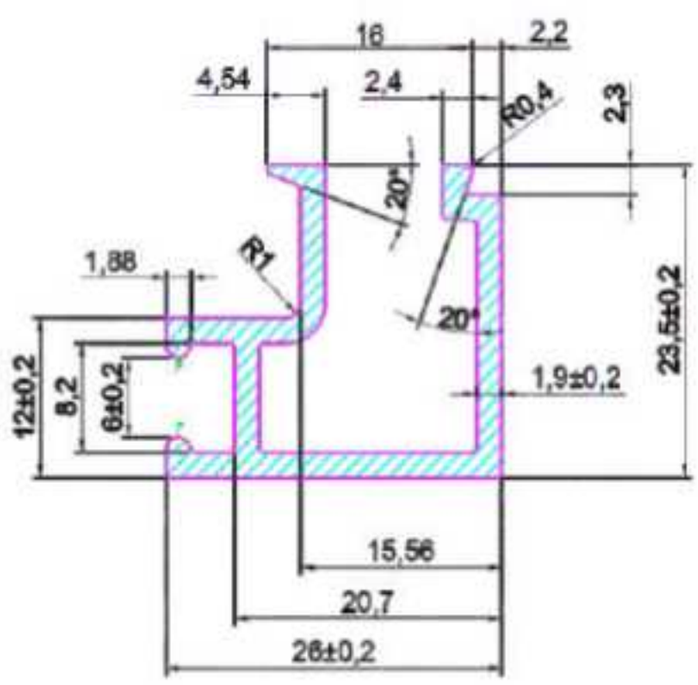

SECTION. NO. - 19452 WT. - 0.420 kg/12'

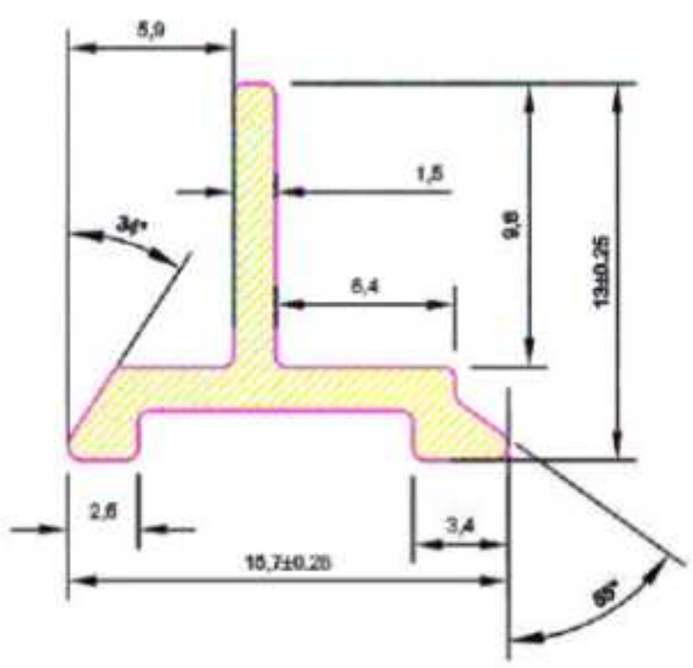

SECTION. NO. - 20159 WT. - 7.970 kg/12"

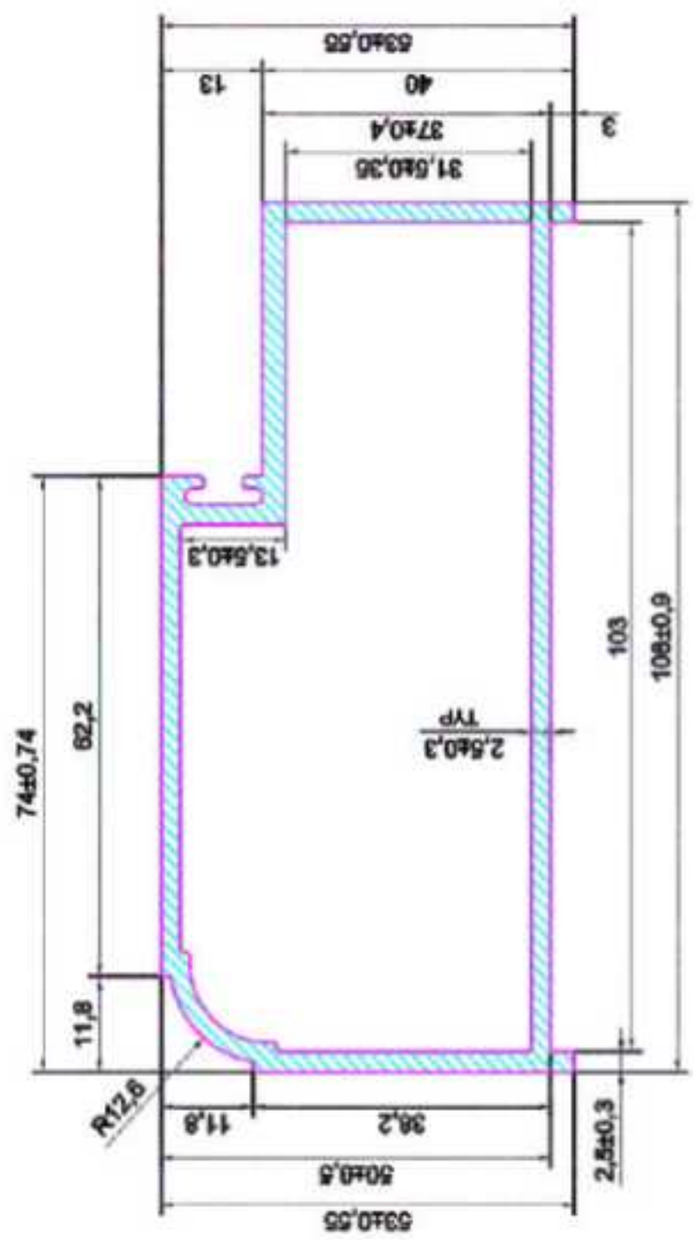

SECTION. NO. - 20149 WT. - 7.316 kg/12"

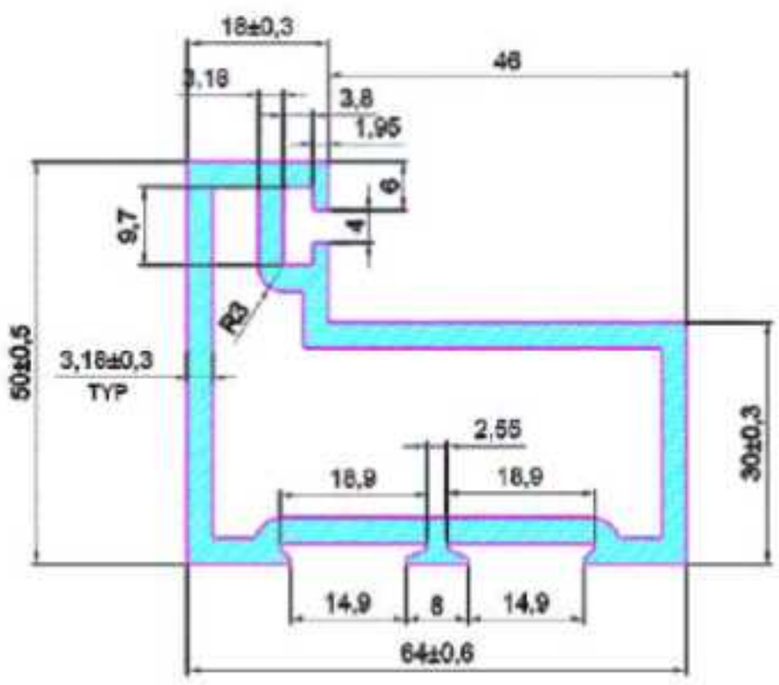

***ALL DIMENSION IN MM, CUT LENGTH IN FOOT AND WEIGHT RANGE IN KGS

VINCO ALUMINIUM PVT LTD

SECTION. NO. - UB - 001 WT. - 3.512 kg/12

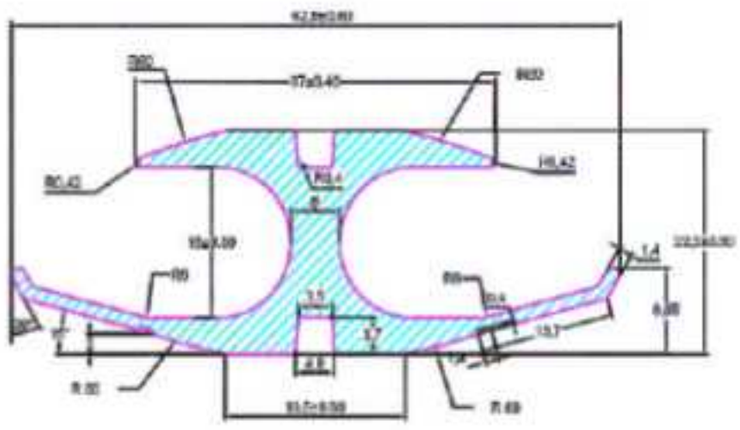

SECTION. NO. - KP - 001 WT. - 1.624 kg/12'

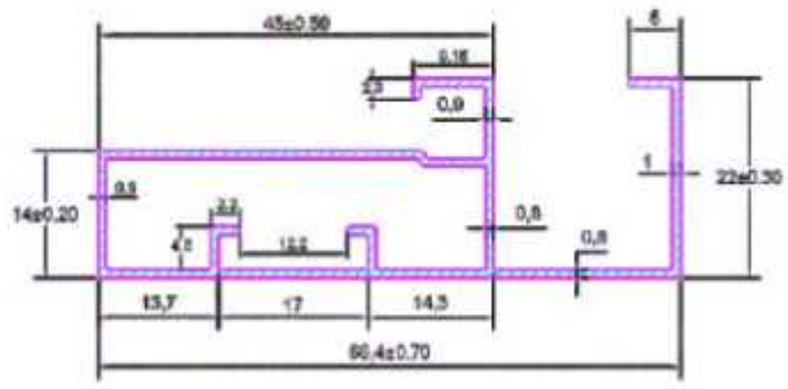

SECTION. NO. - UB - 002 WT. - 3.962 kg/12

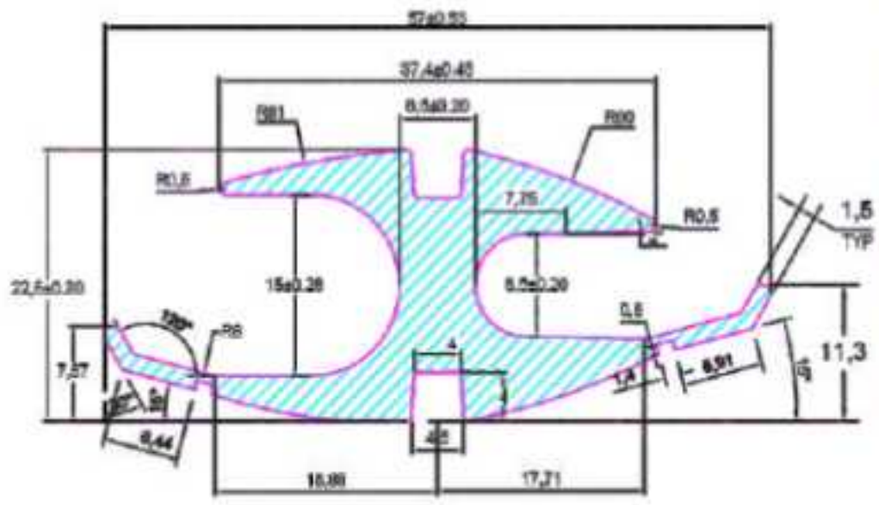

SECTION. NO. - KP - 002 WT. - 1.411 kg/12"

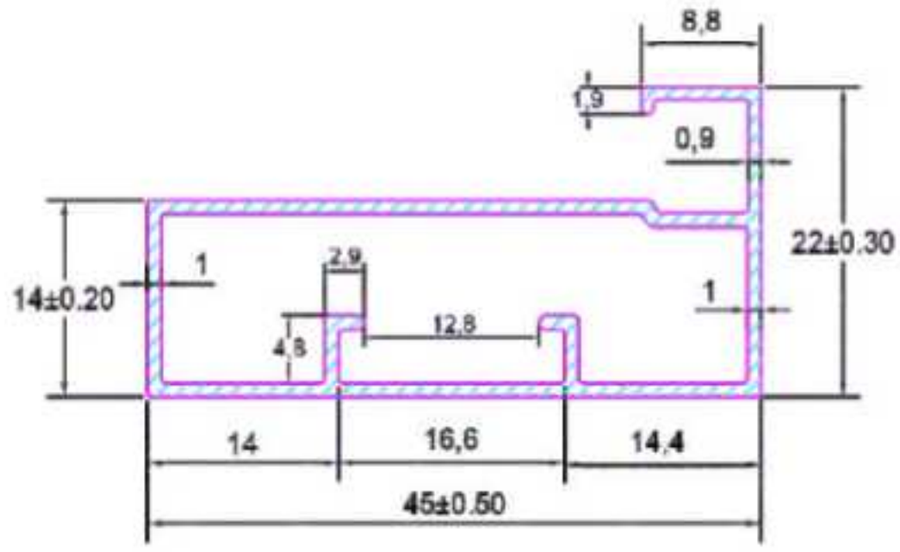

SECTION. NO. - UB - 003 WT. - 4.384 kg/12

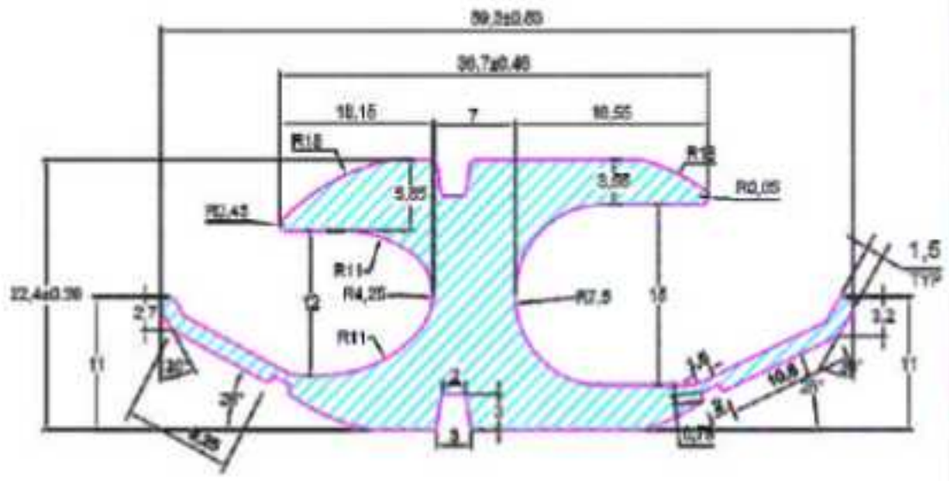

SECTION. NO. - V - 6619 WT. - 2.210 kg/12'

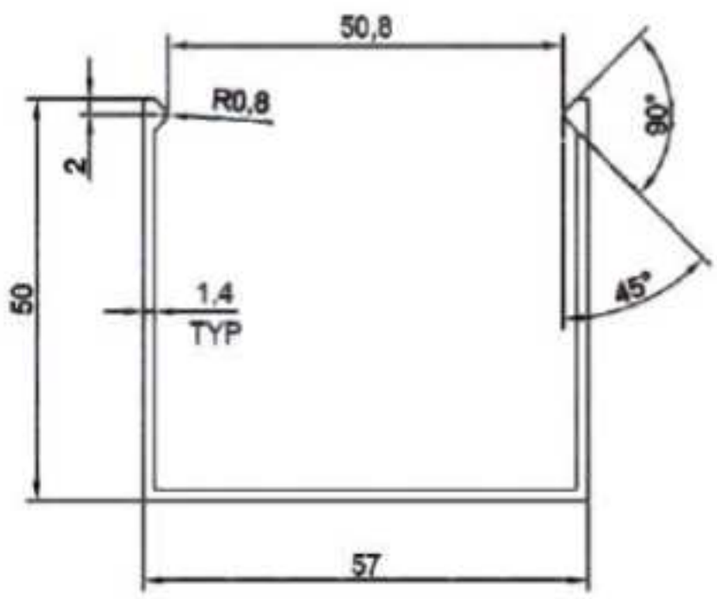

***ALL DIMENSION IN MM, CUT LENGTH IN FOOT AND WEIGHT RANGE IN KGS

VINCO ALUMINIUM PVT LTD

SECTION. NO. - 1640 WT. - 0.550 kg/ 12'

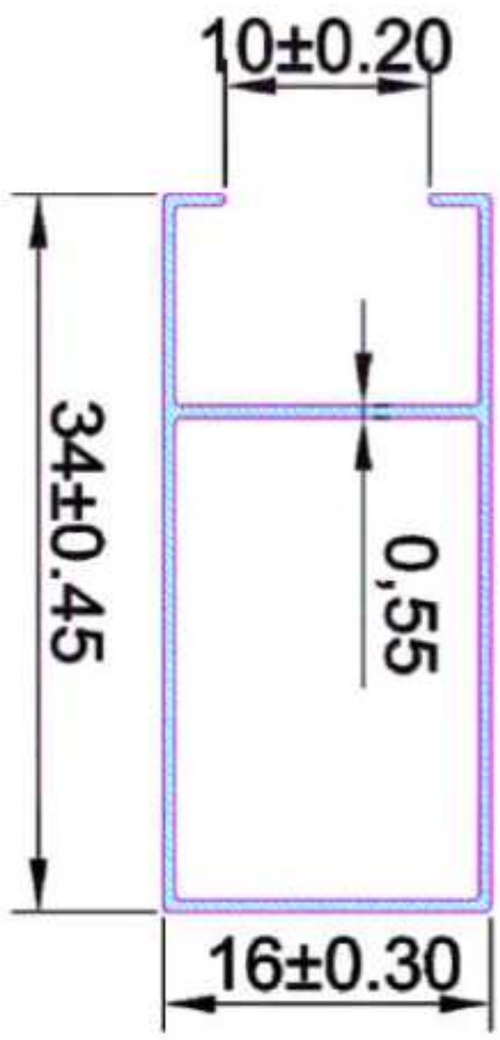

SECTION. NO. - 1460 WT. - 0.630 kg/12'

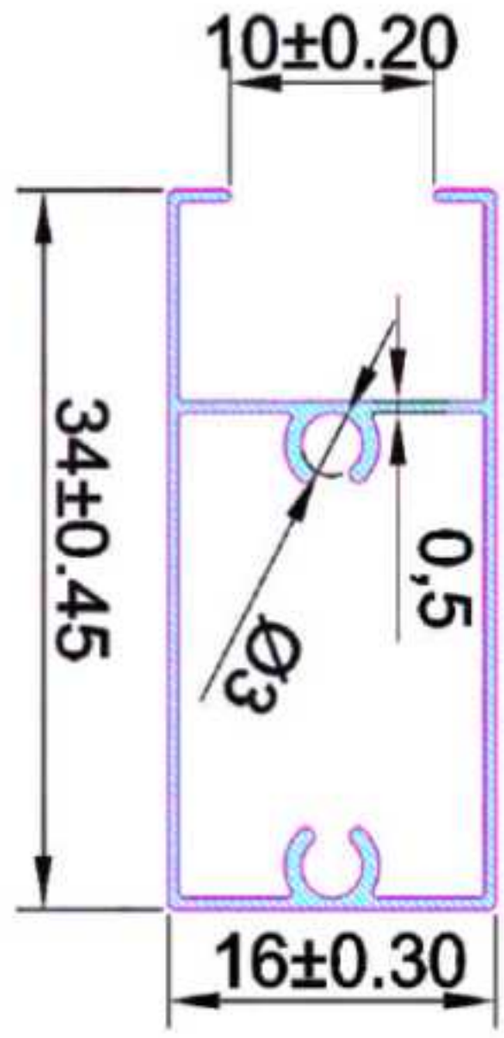

SECTION. NO. - 1510 WT. - 0.650 kg/12'

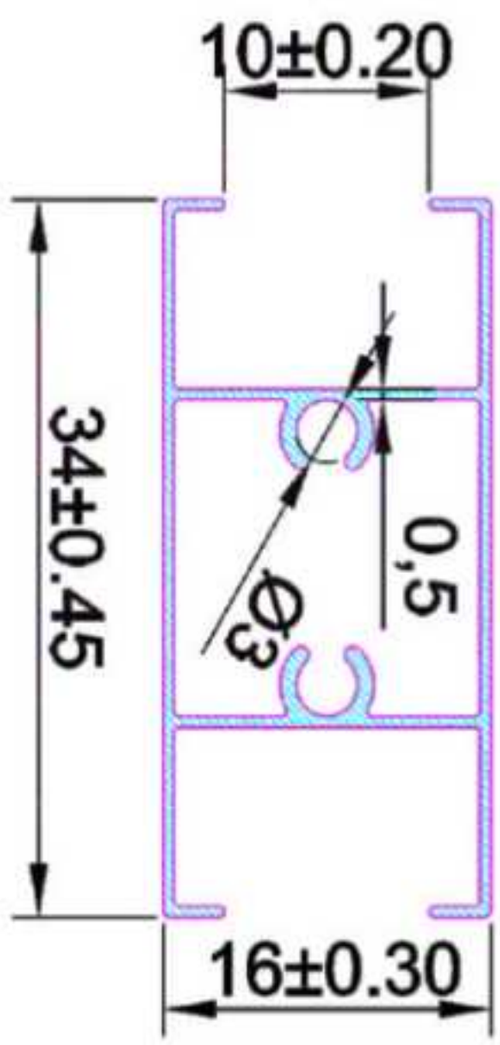

SECTION. NO. - 1914 WT. - 0.950 kg/12"

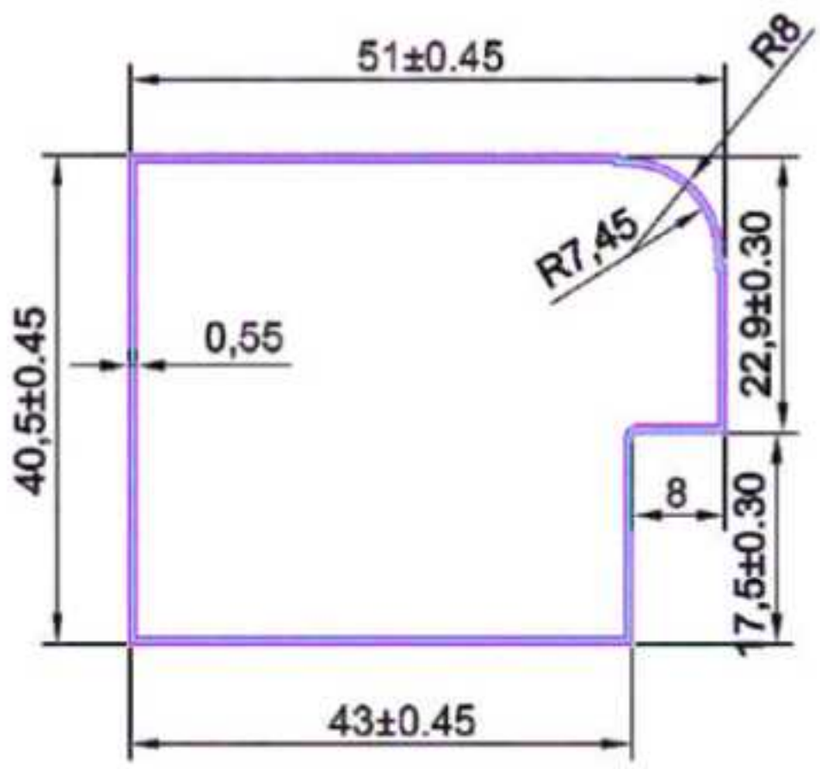

***ALL DIMENSION IN MM, CUT LENGTH IN FOOT AND WEIGHT RANGE IN KGS

VINCO ALUMINIUM PVT LTD

SECTION. NO. - NK - 01 WT. - 6.376 kg/ 12'

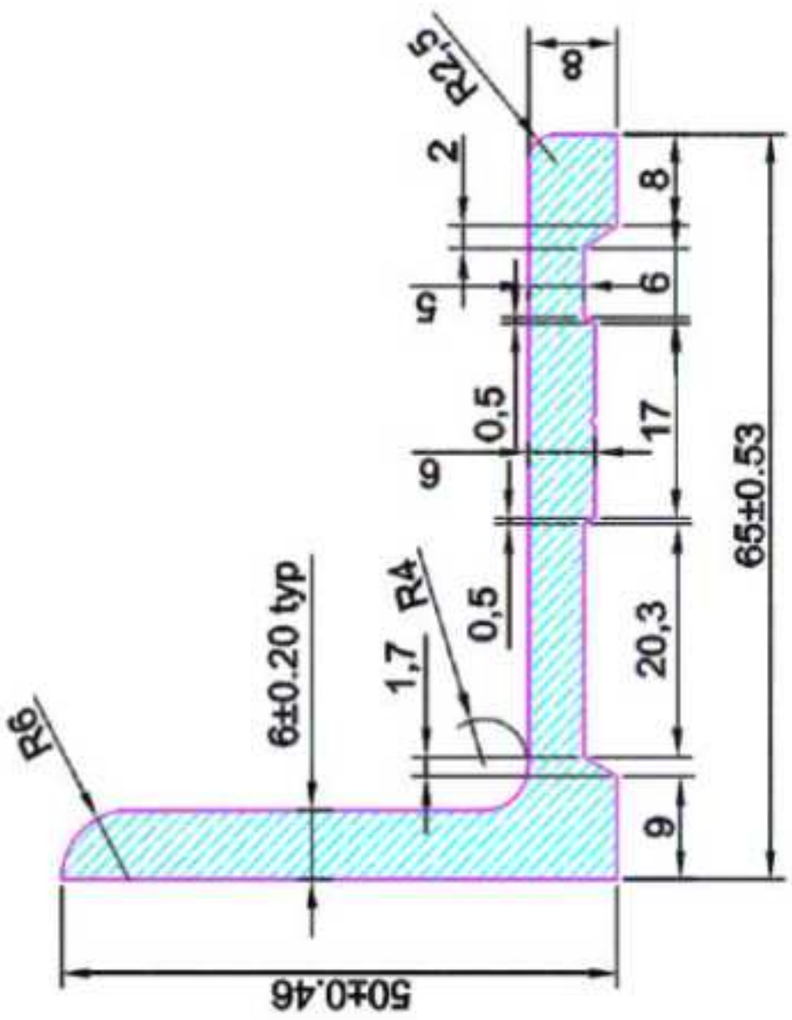

SECTION. NO. - NK - 02 WT. - 3.610 kg/12'

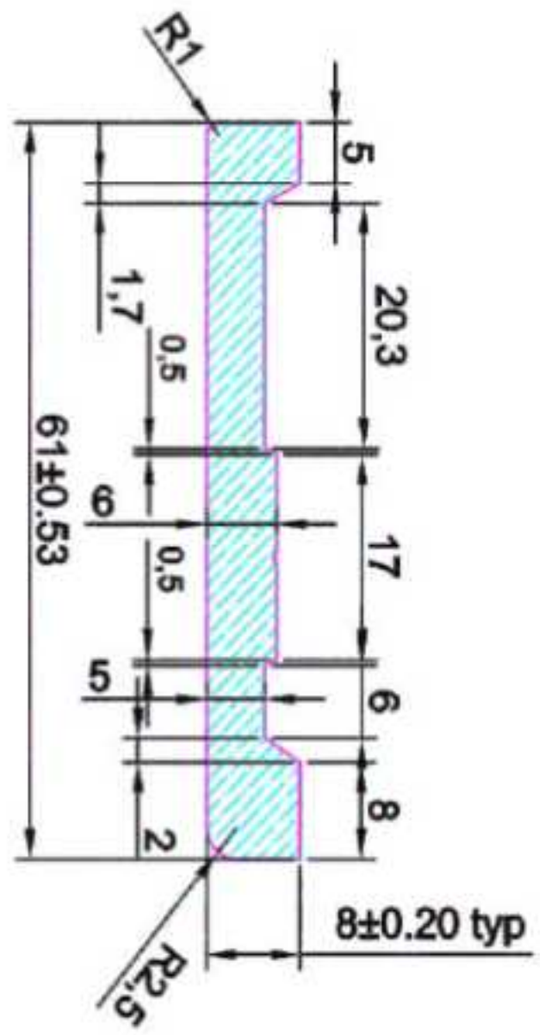

SECTION. NO. - NK - 03 WT. - 3.967 kg/12'

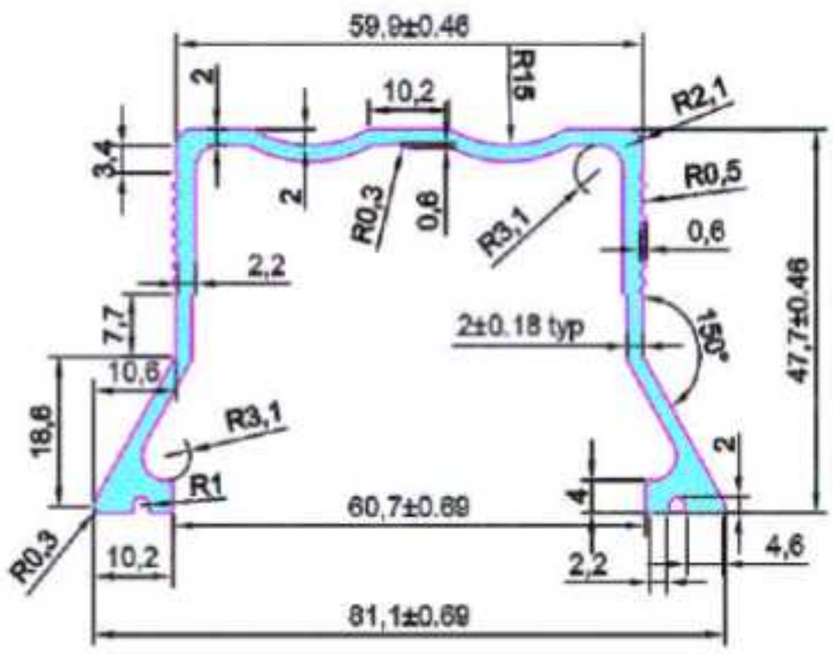

SECTION. NO. - VC - 0017 WT. - 0.690 kg/12'

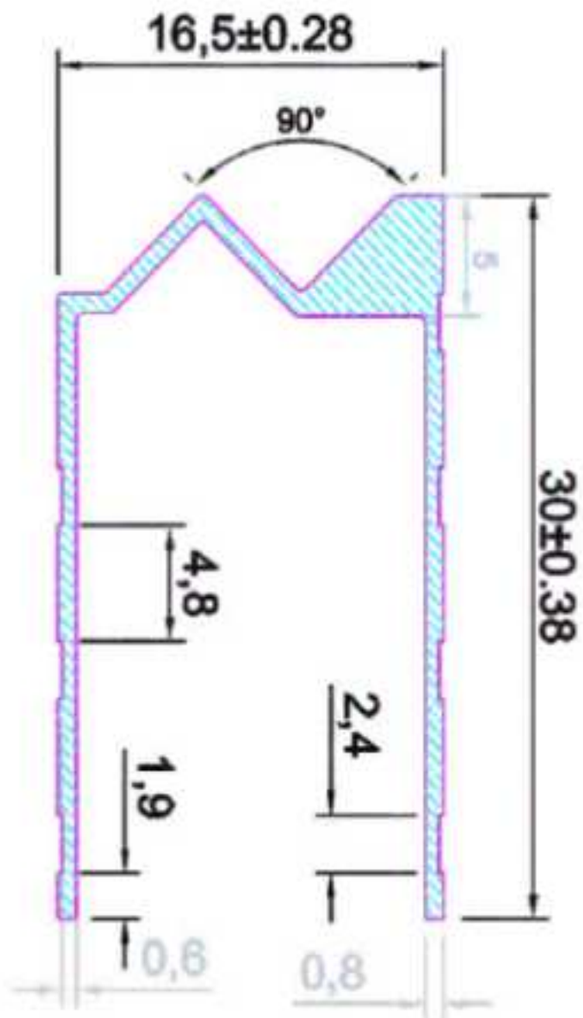

***ALL DIMENSION IN MM, CUT LENGTH IN FOOT AND WEIGHT RANGE IN KGS

VINCO ALUMINIUM PVT LTD

SECTION. NO. - MB - 001 WT. - 4.564 kg/12"

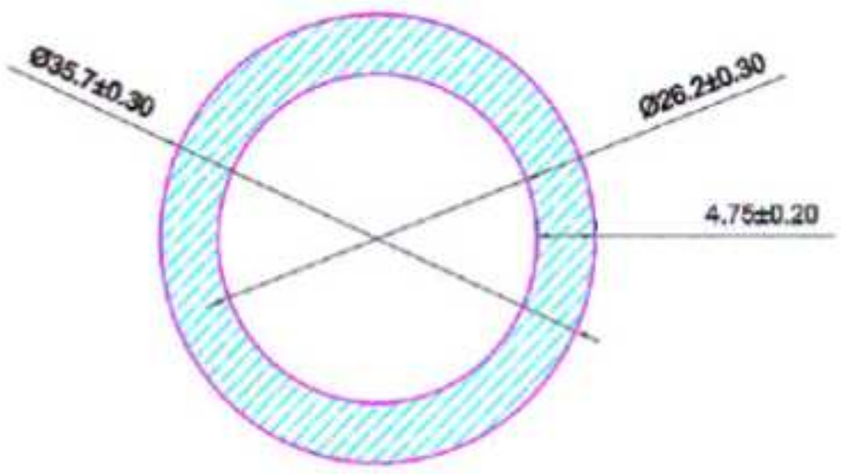

SECTION. NO. - MB - 002 WT. - 4.062 kg/12

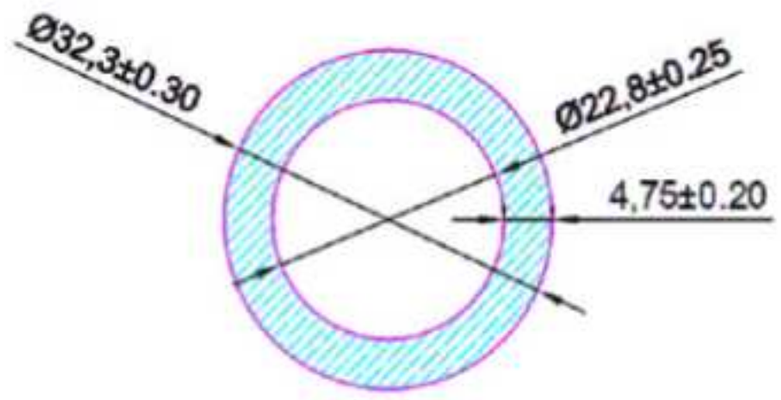

SECTION. NO. - MB - 003 WT. - 3,620 kg/12

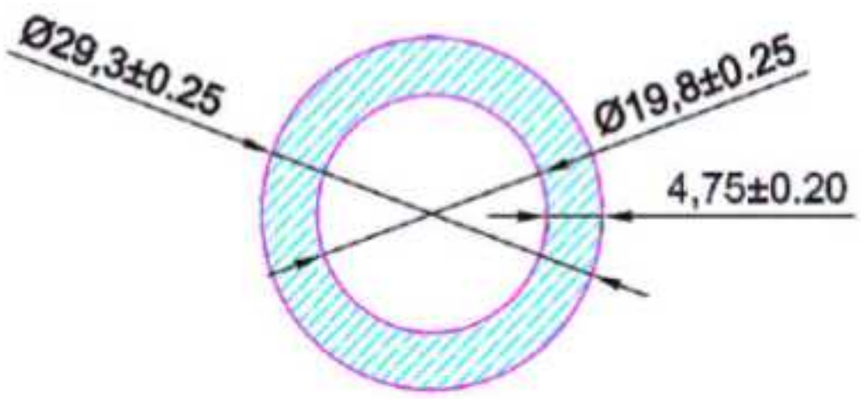

SECTION. NO. - SM - 001 WT. - 0.611 kg/12"

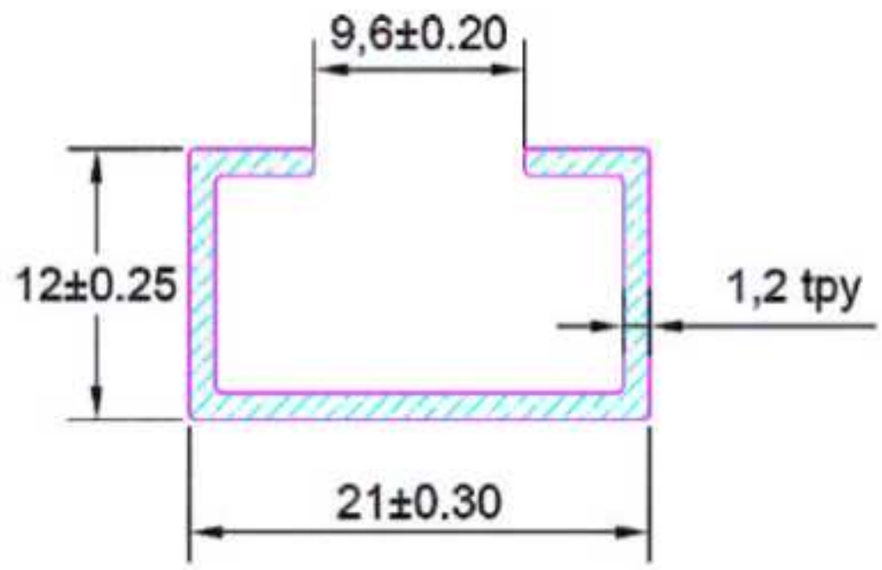

SECTION. NO. - SK - 01 WT. - 4.901 kg/12

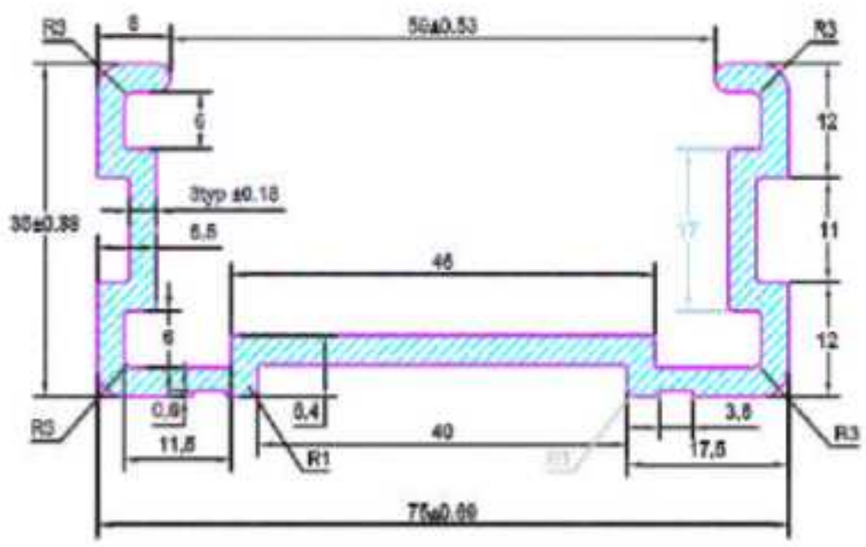

SECTION. NO. - SK - 02 WT. - 1.787 kg/12"

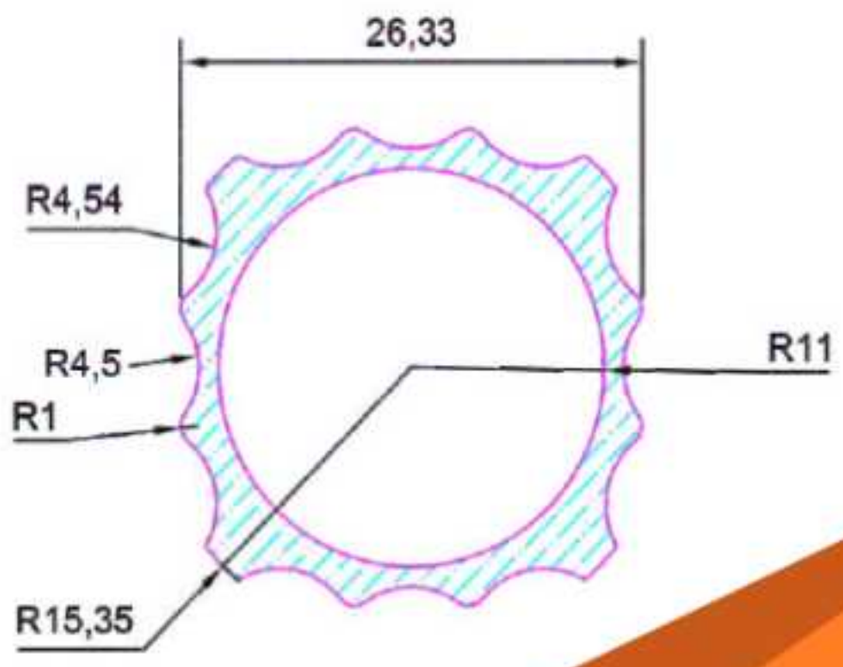

***ALL DIMENSION IN MM, CUT LENGTH IN FOOT AND WEIGHT RANGE IN KGS

VINCO ALUMINIUM PVT LTD

SECTION. NO. - AL - 006 WT. - 18.402 kg/12"

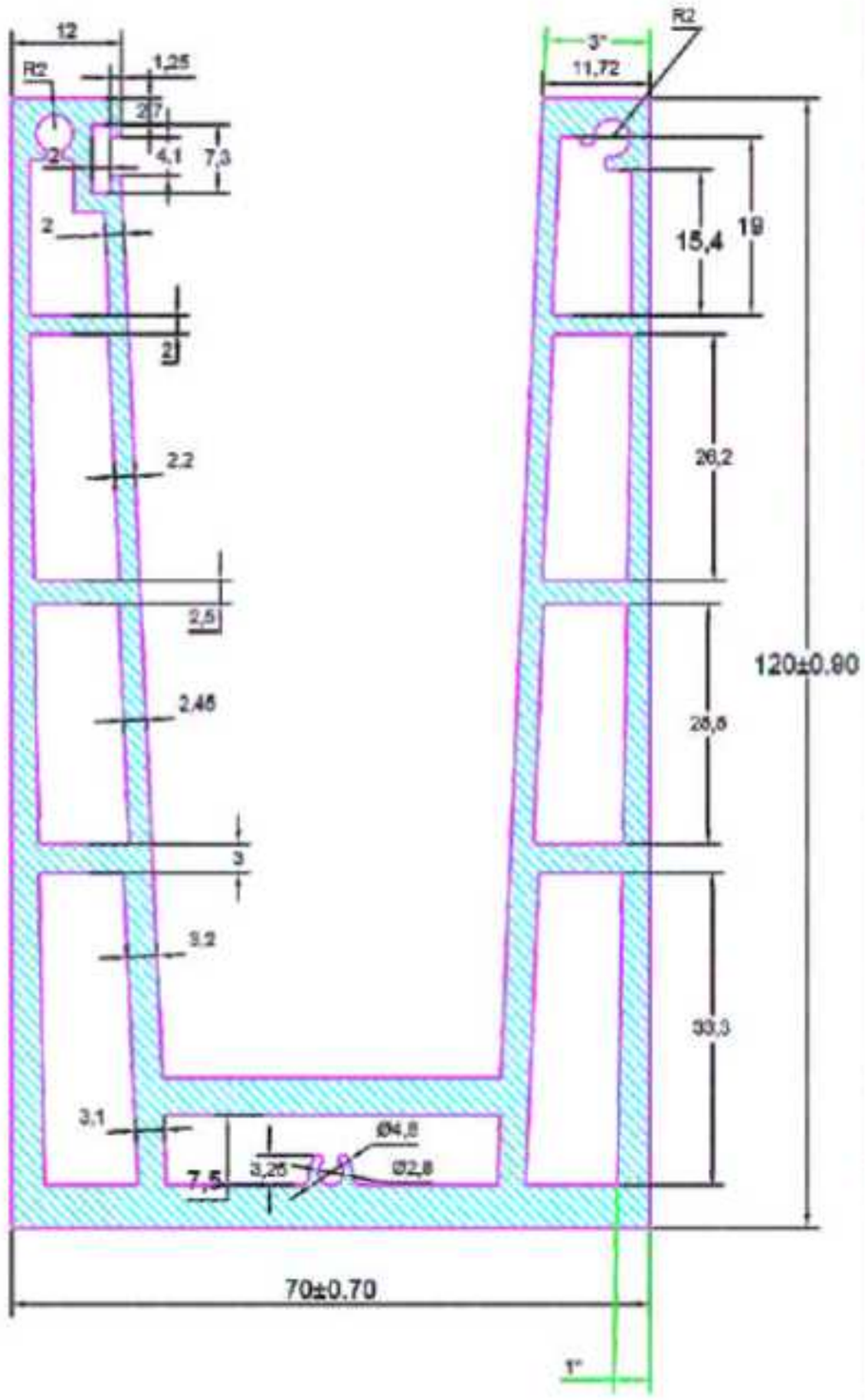

SECTION. NO. - B - 002 WT. - 3.761 kg/12"

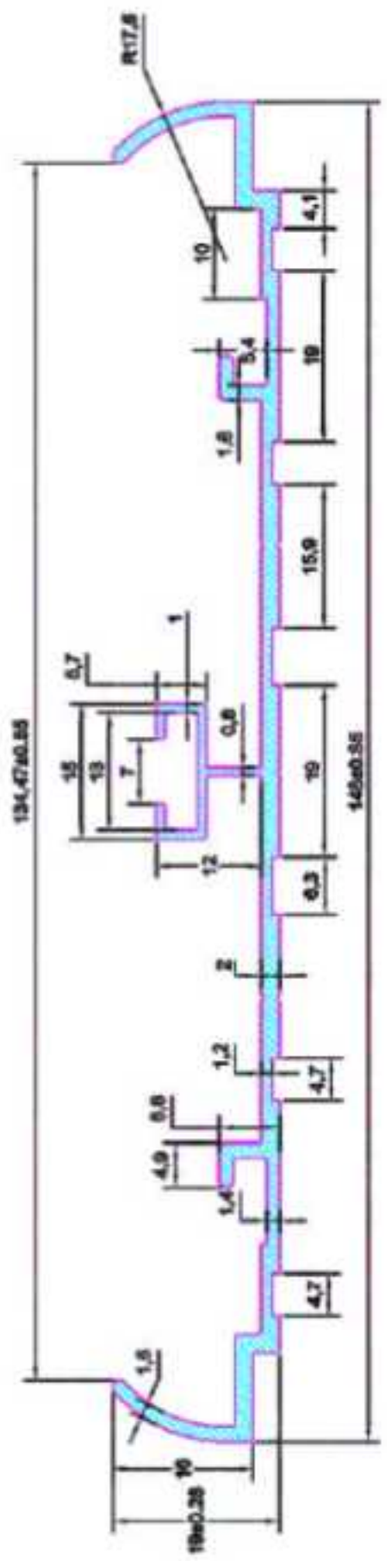

SECTION. NO. - B - 001 WT. - 1.550 kg/12

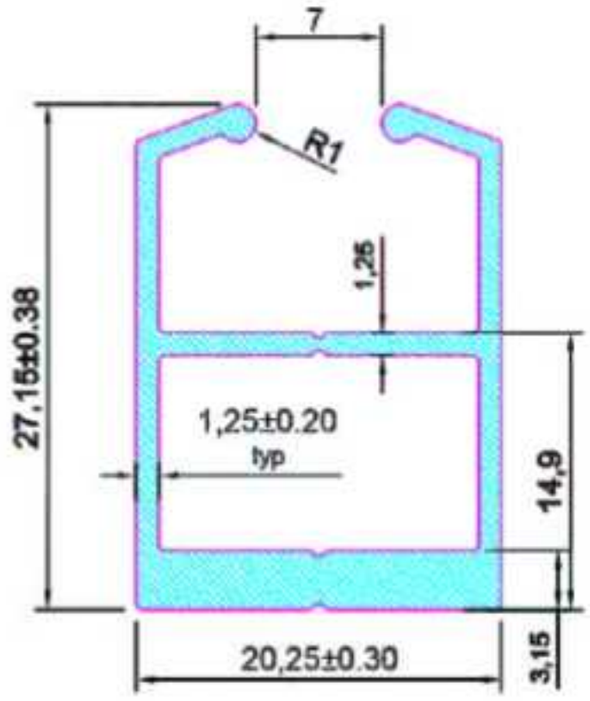

SECTION. NO. - HB- 001 WT. - 1.369 kg/12'

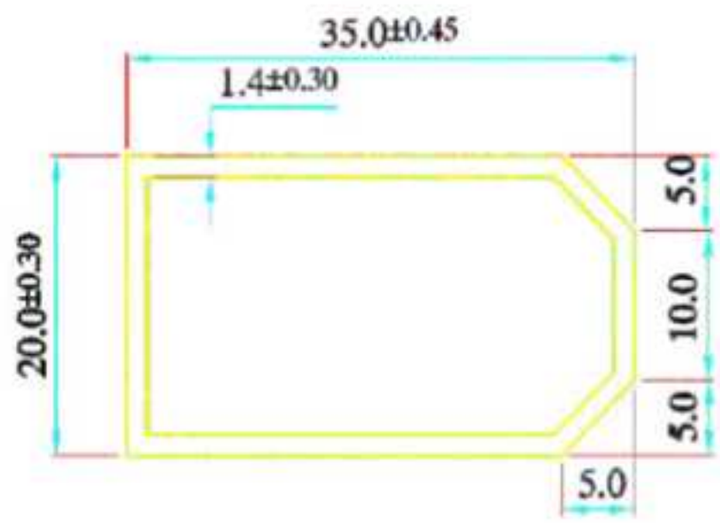

***ALL DIMENSION IN MM, CUT LENGTH IN FOOT AND WEIGHT RANGE IN KGS

VINCO ALUMINIUM PVT LTD

SECTION. NO. - AL - 001 WT. - 3.800 kg/ 12'

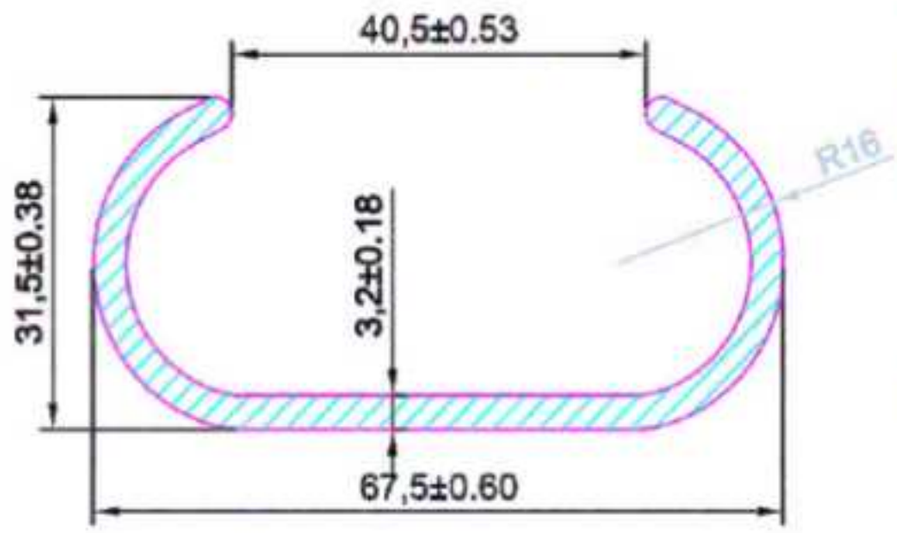

SECTION. NO. - AL - 002 WT. - 1.700 kg/12"

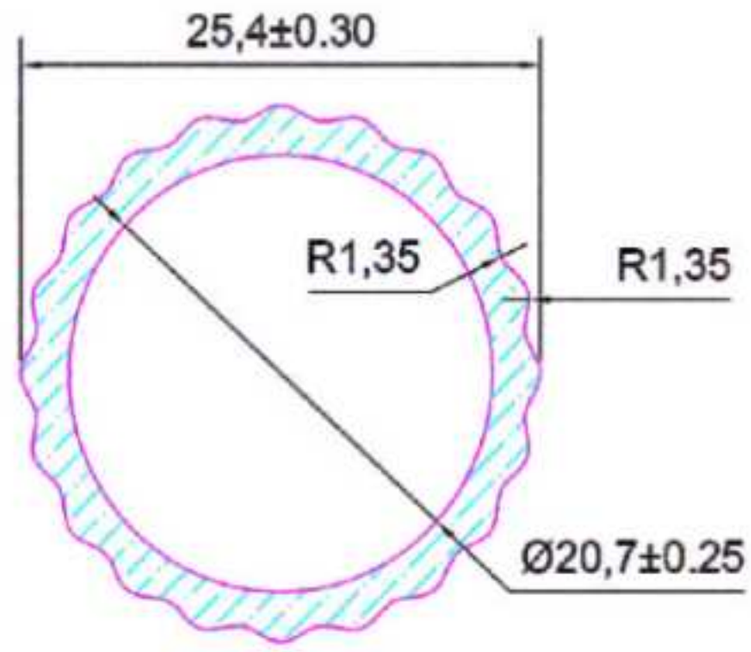

SECTION. NO. - AL - 003 WT. - 1.777kg /12'

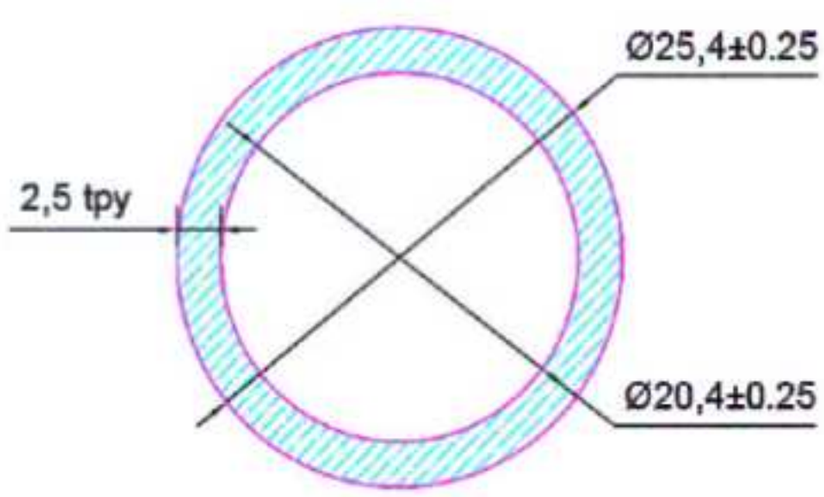

SECTION. NO. - AL - 004 WT. - 0.939 kg/12"

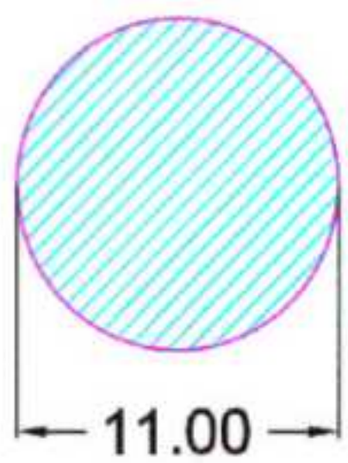

SECTION. NO. - AL - 005 WT. - 1.500 kg/ 12'

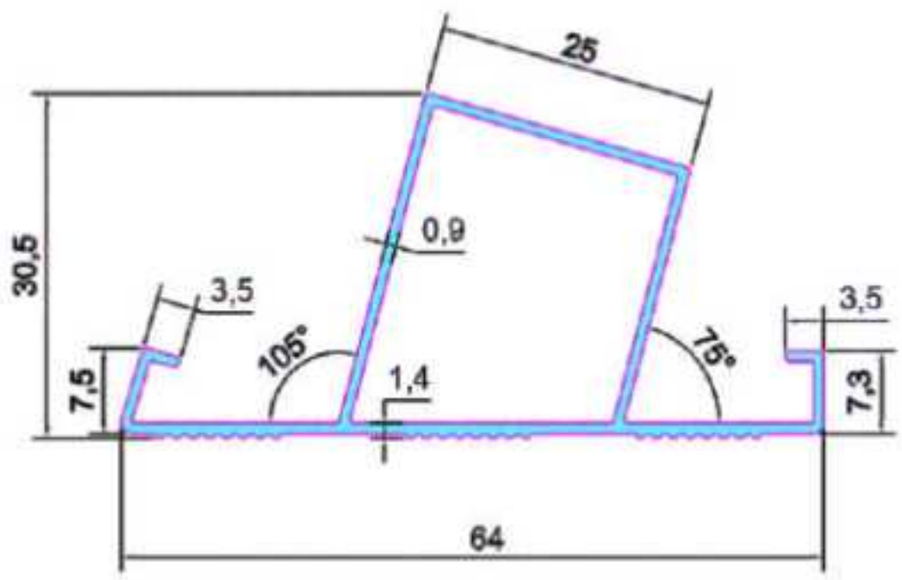

SECTION. NO. - AL - 007 WT. - 1.165 kg/ 12'

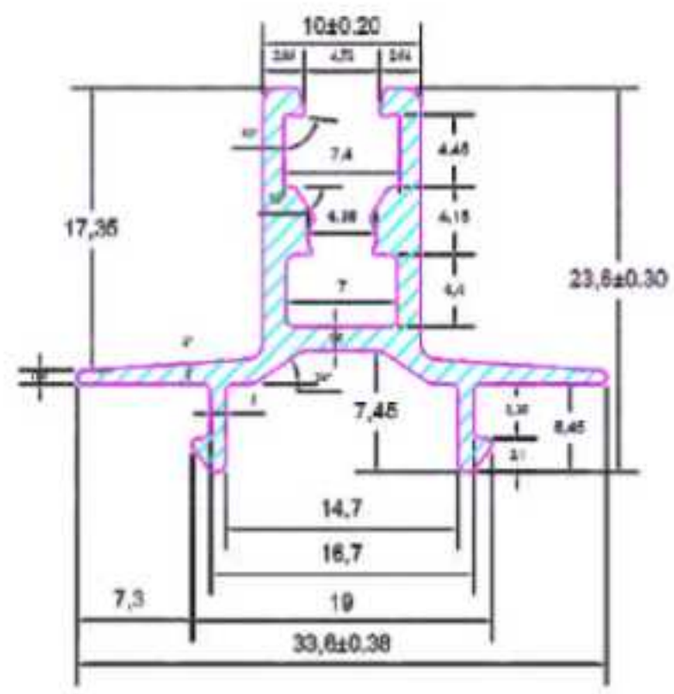

***ALL DIMENSION IN MM, CUT LENGTH IN FOOT AND WEIGHT RANGE IN KGS

VINCO ALUMINIUM PVT LTD

SECTION. NO. - NOS - 001 WT. - 2.294 kg/ 12'

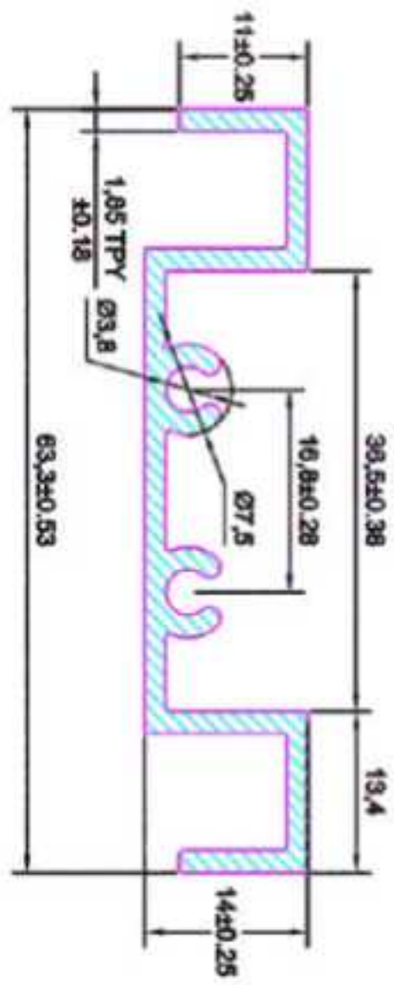

SECTION. NO. - NOS - 002 WT. - 2.148 kg/12'

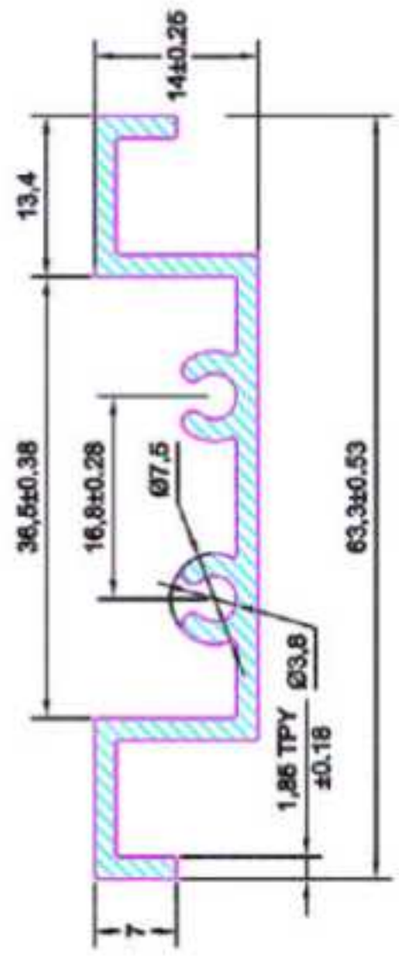

SECTION. NO. - NOS - 003 WT. - 3.119 kg/12'

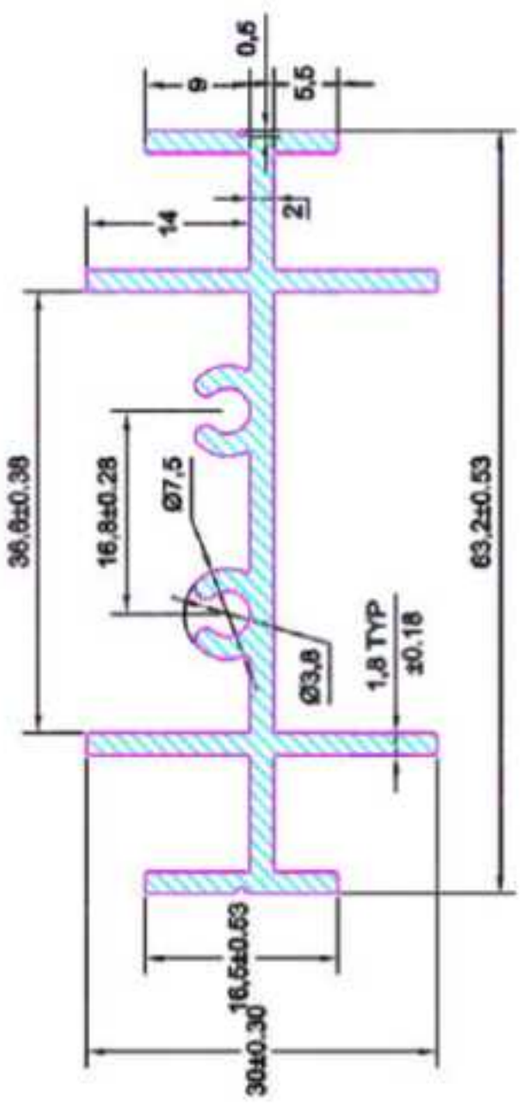

SECTION. NO. - NOS - 004 WT. - 3.646 kg/12"

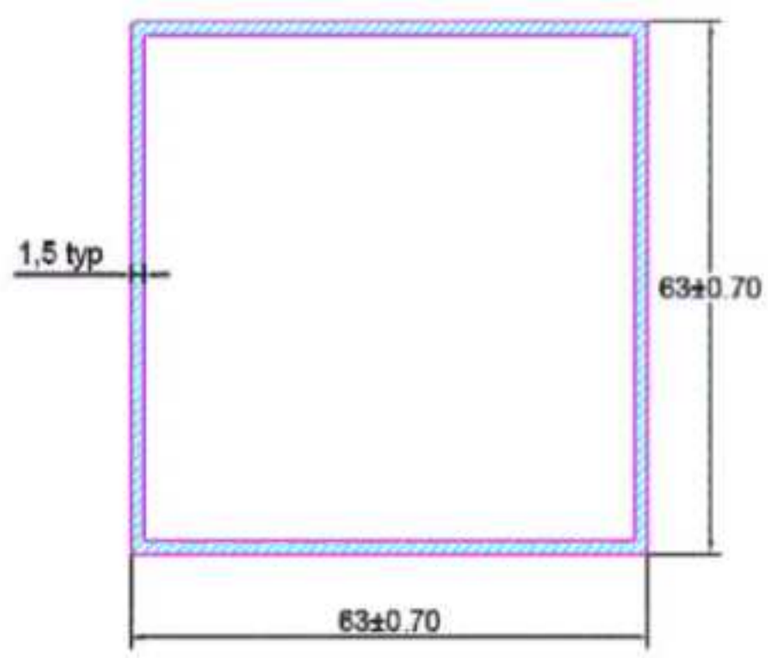

***ALL DIMENSION IN MM, CUT LENGTH IN FOOT AND WEIGHT RANGE IN KGS

VINCO ALUMINIUM PVT LTD

SECTION. NO. - JR - 0008 WT. - 1.896 kg/12

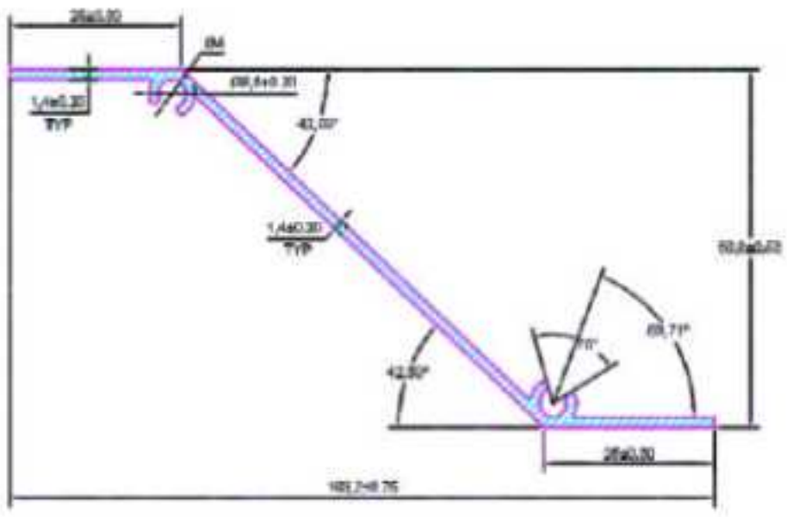

SECTION. NO. - JR - 0009 WT. - 1.257 kg/12

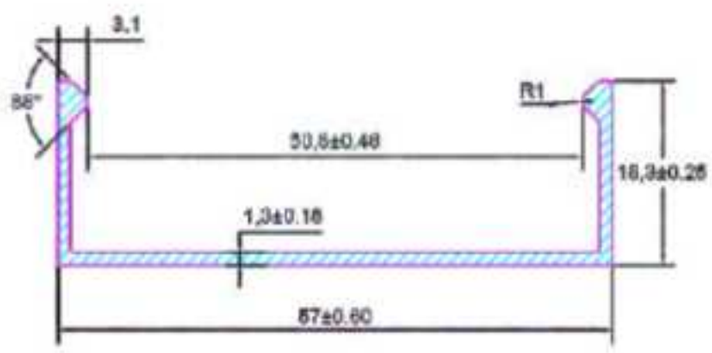

SECTION. NO. - JR - 0010 WT. - 10.420 kg/12"

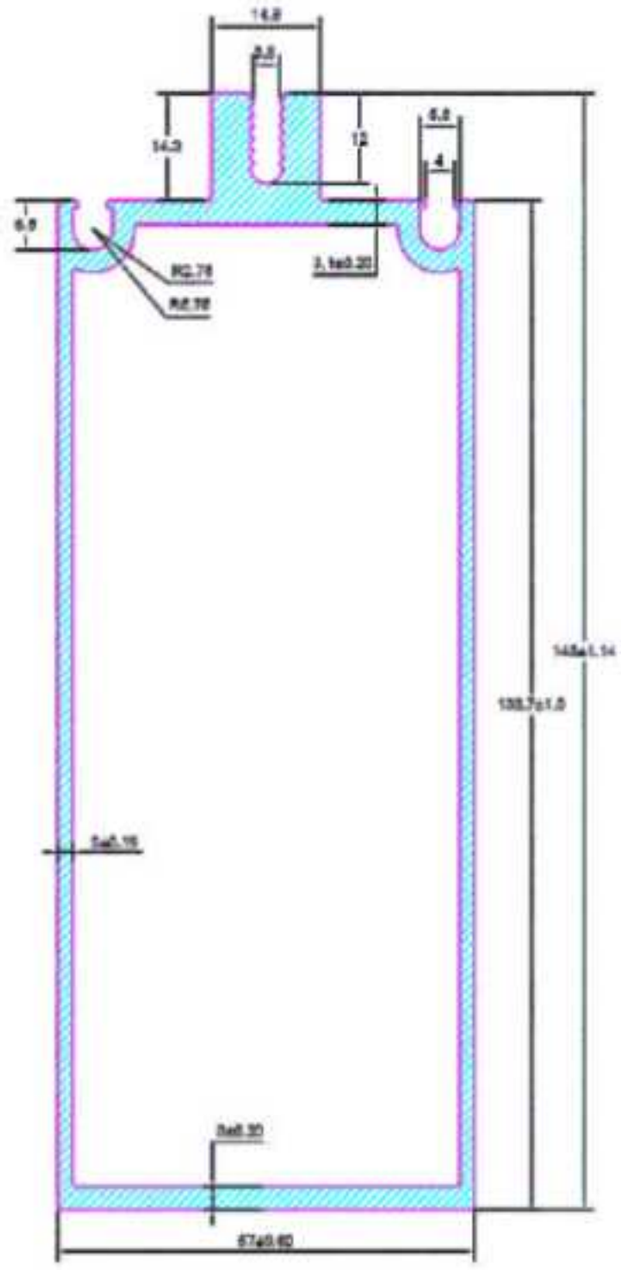

SECTION. NO. - JR - 0011 WT. - 1.411 kg/ 12'

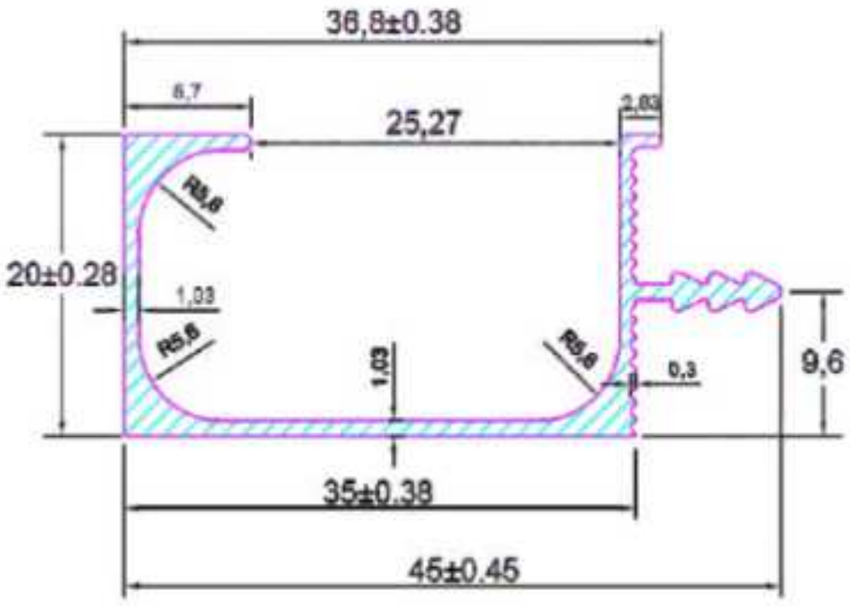

SECTION. NO. - JR - 0012 WT. - 1.624 kg/12"

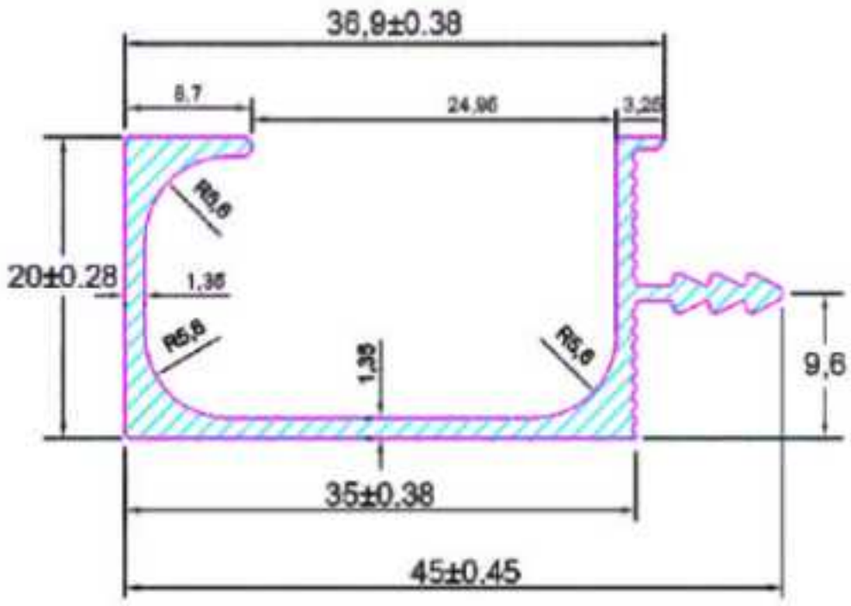

***ALL DIMENSION IN MM, CUT LENGTH IN FOOT AND WEIGHT RANGE IN KGS

VINCO ALUMINIUM PVT LTD

SECTION. NO. - JR - 0006 WT. - 10.727 kg/12'

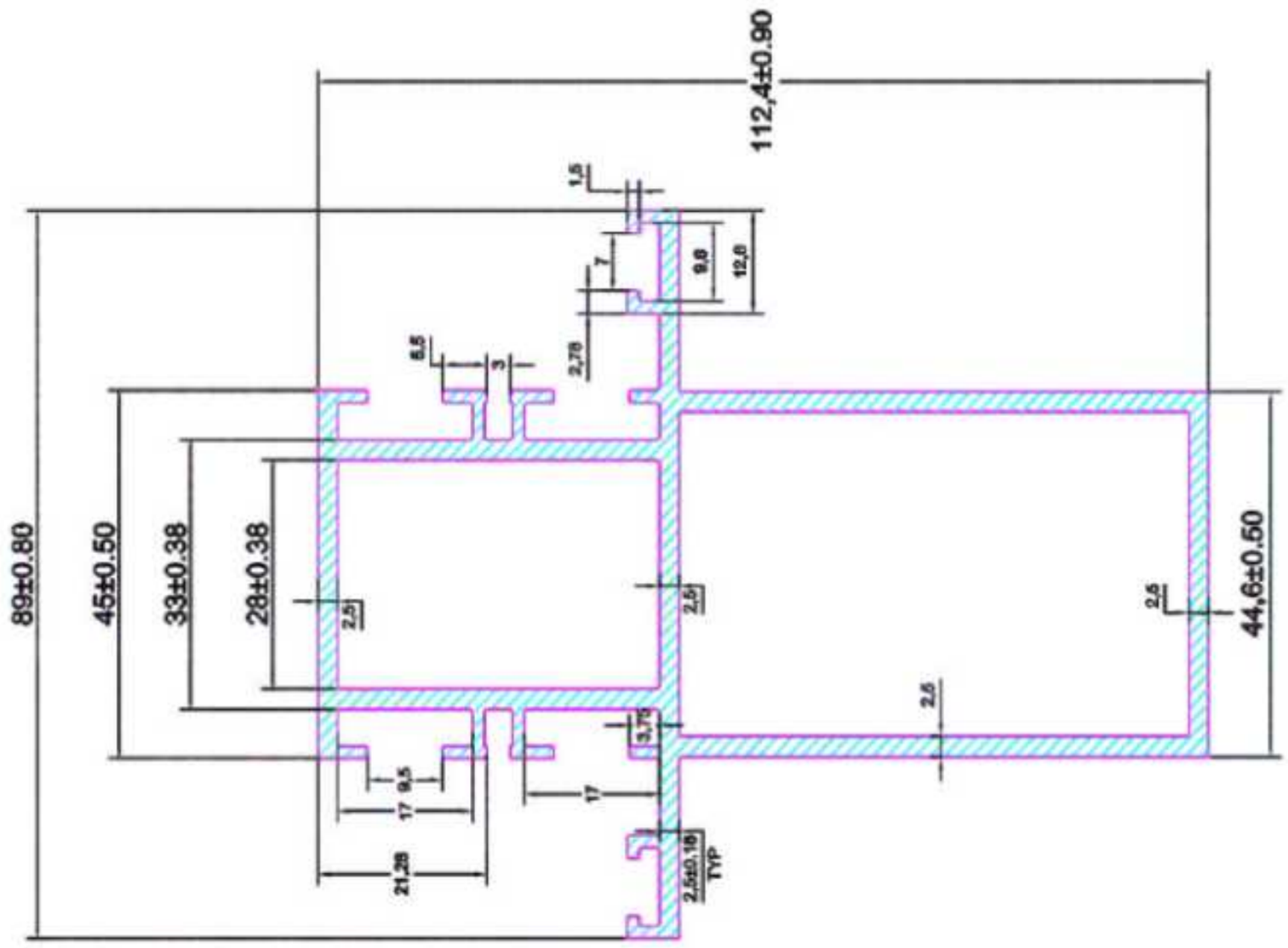

SECTION. NO. - JR - 0007 WT. - 15.064 kg/ 12'

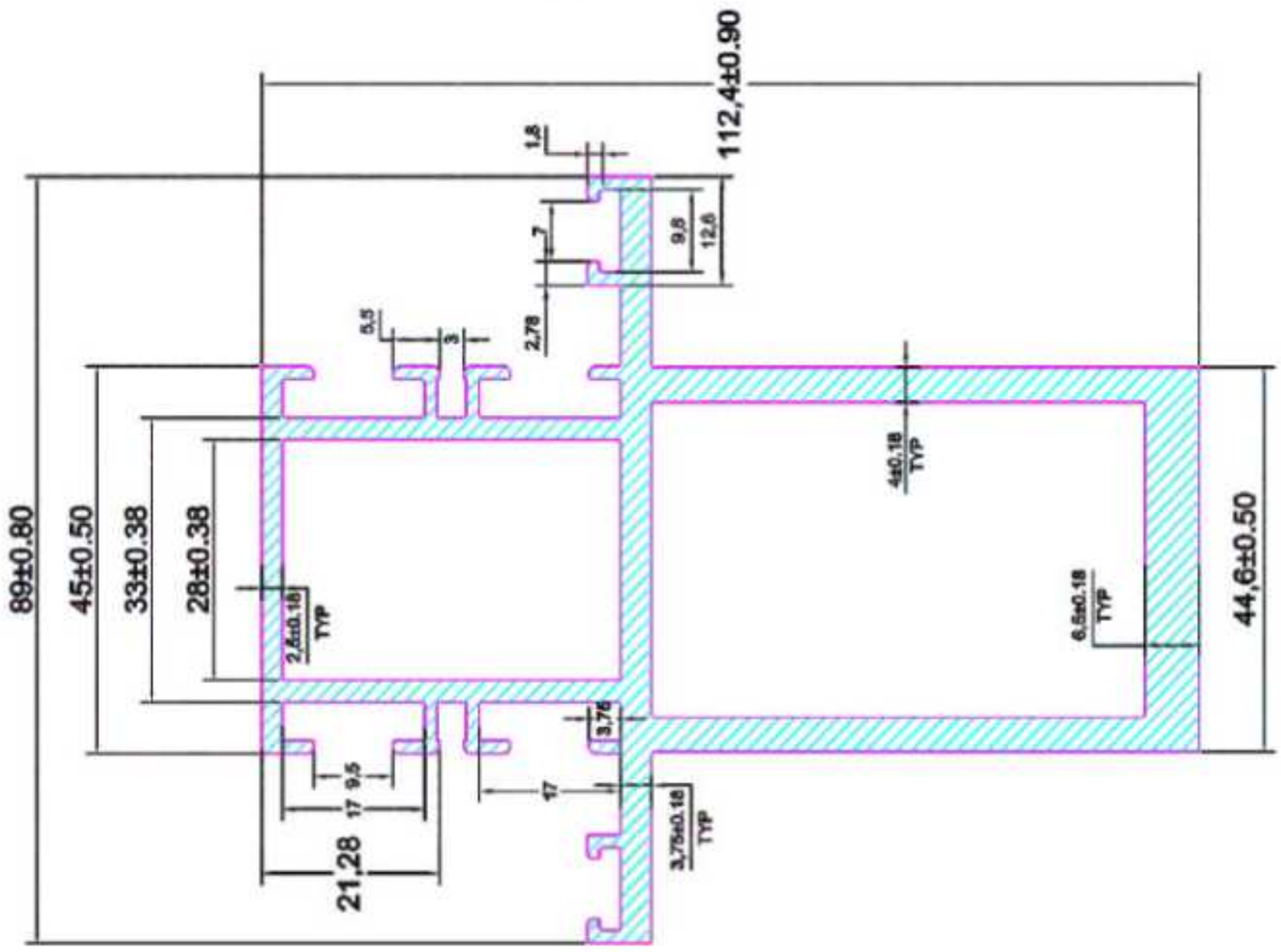

***ALL DIMENSION IN MM, CUT LENGTH IN FOOT AND WEIGHT RANGE IN KGS

VINCO ALUMINIUM PVT LTD

SECTION. NO. - JR - 0001 WT. - 3.717 kg/12

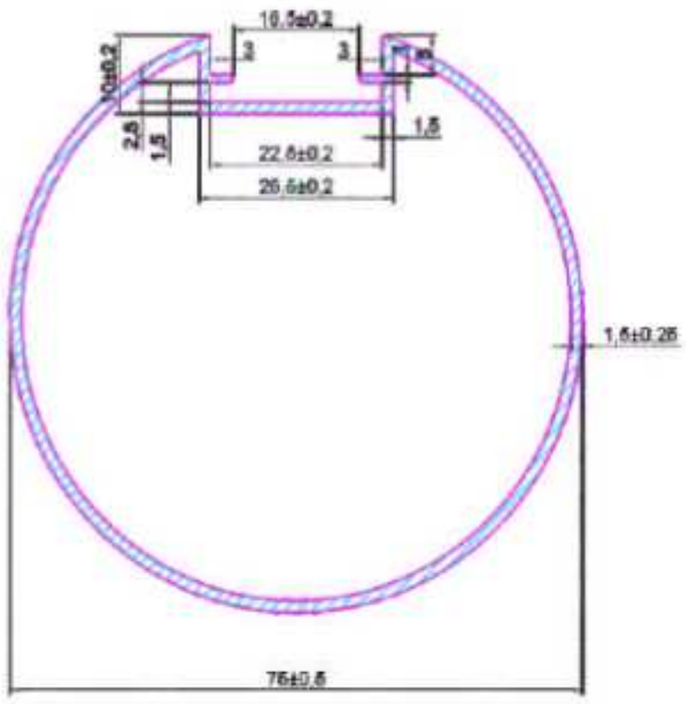

SECTION. NO. - ------- WT. - 0.450 kg/12"

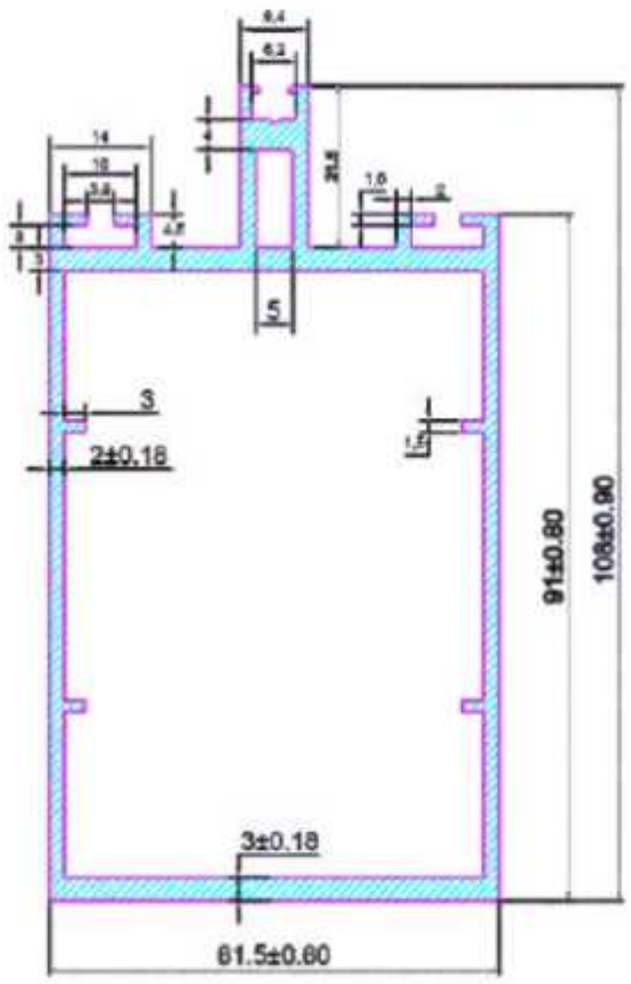

SECTION. NO. - JR - 0002 WT. - 0.260 kg/12

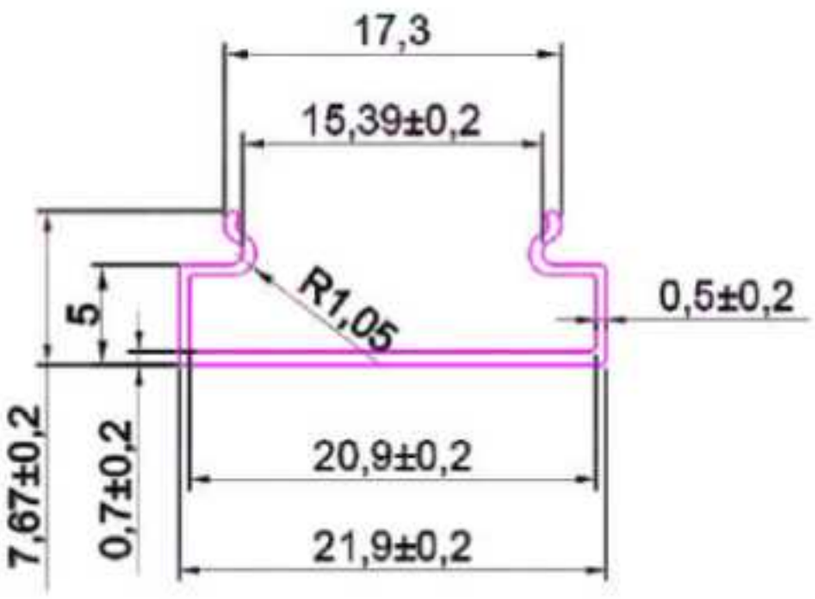

SECTION. NO. - JR - 0004 WT. - 1.698 kg/12

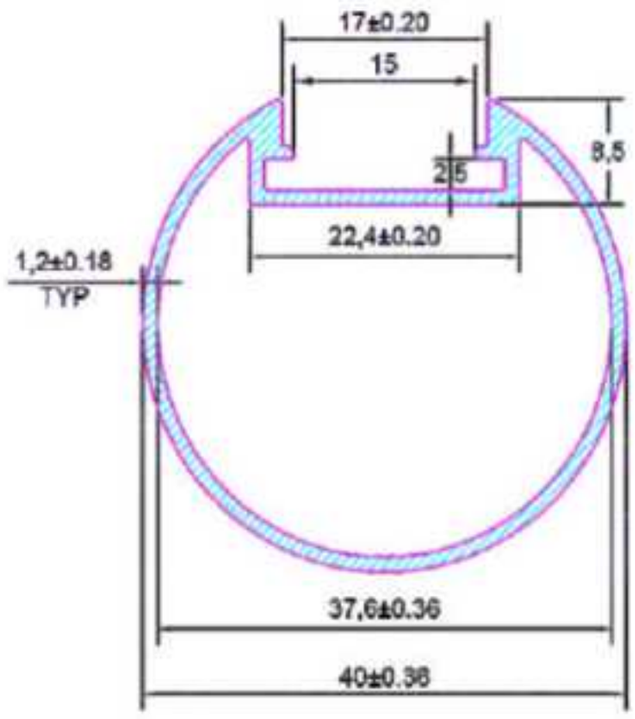

SECTION. NO. - JR - 0005 WT. - 0.249 kg/12"

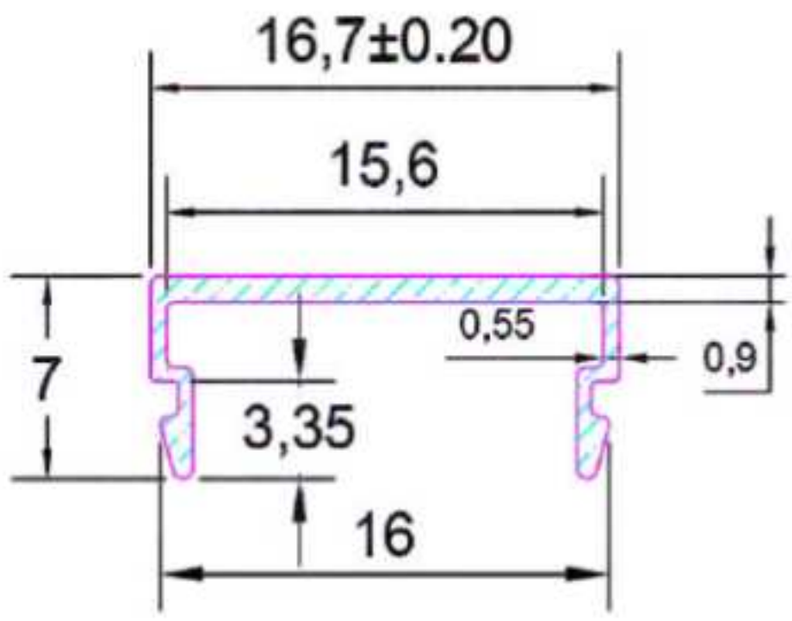

***ALL DIMENSION IN MM, CUT LENGTH IN FOOT AND WEIGHT RANGE IN KGS

VINCO ALUMINIUM PVT LTD

SECTION. NO. - ME - 009 WT. - 21.168 kg/12'

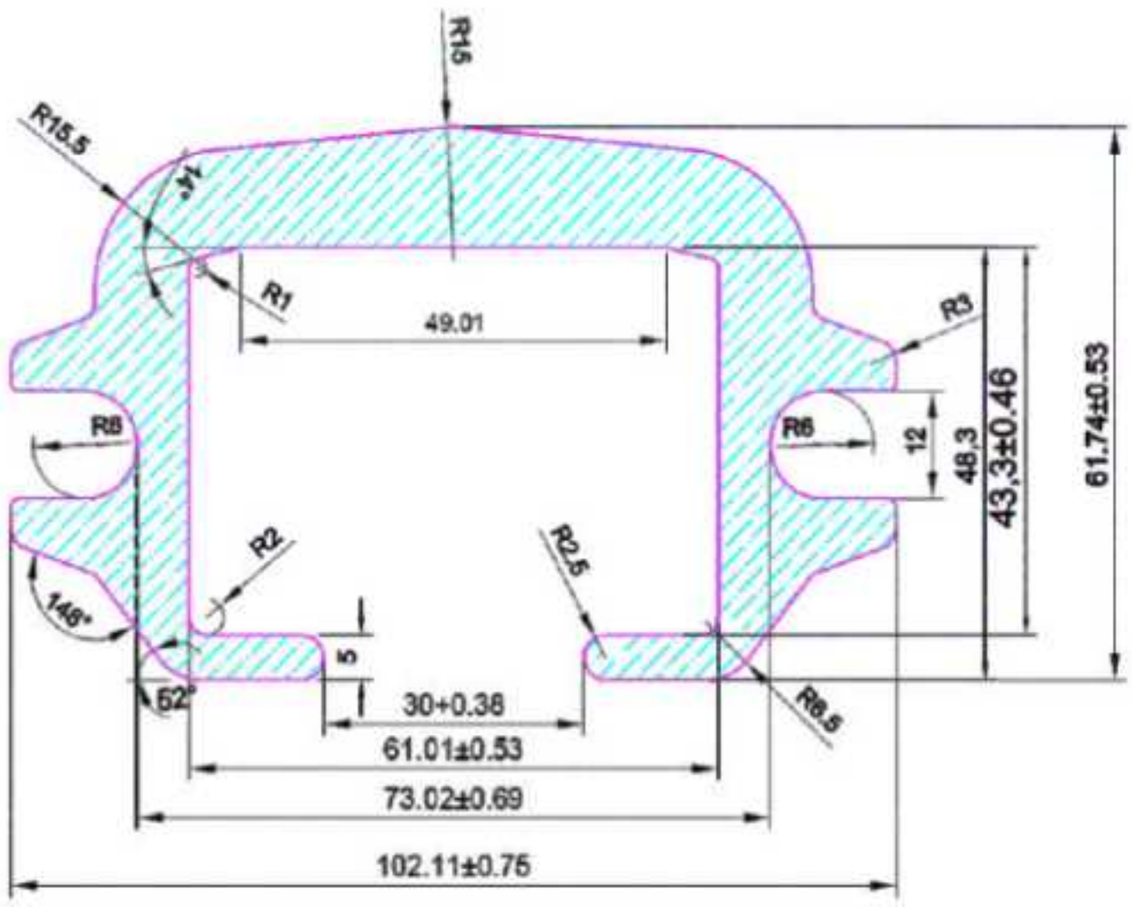

SECTION. NO.- ME - 010 WT. - 9.239 kg/ 12'

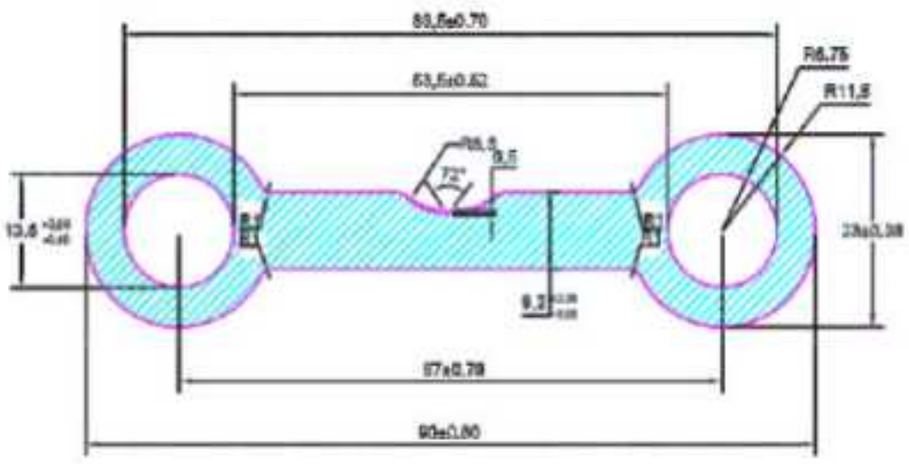

SECTION. NO.- ME - 011 WT. - 0.980 kg/ 12'

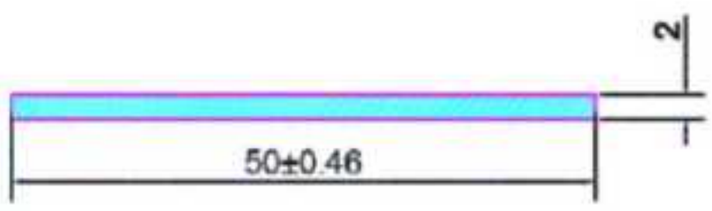

***ALL DIMENSION IN MM, CUT LENGTH IN FOOT AND WEIGHT RANGE IN KGS

VINCO ALUMINIUM PVT LTD

SECTION. NO. - ME - 005 WT. - 5.380 kg/ 12'

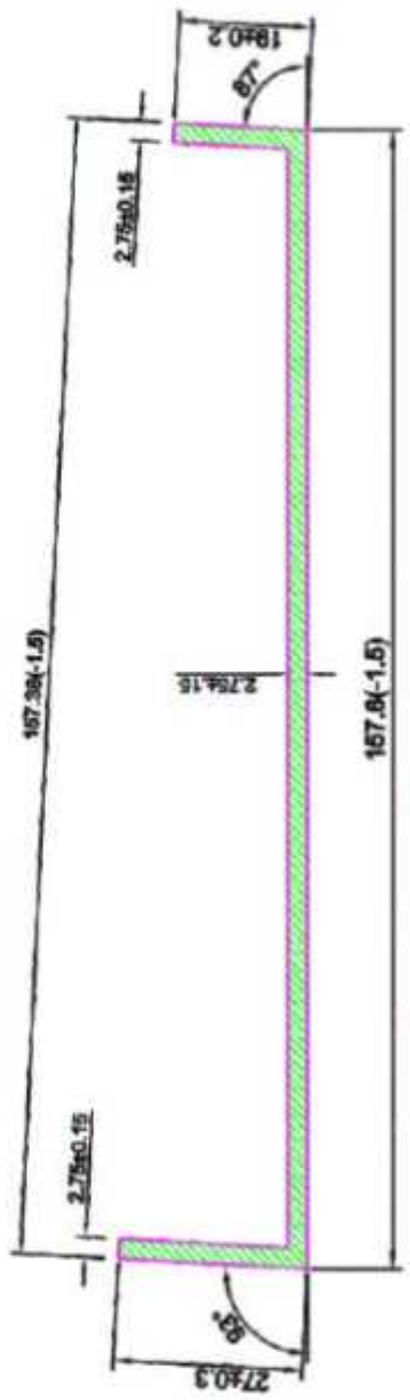

SECTION. NO. - ME- 008 WT. - 7.055 kg/12'

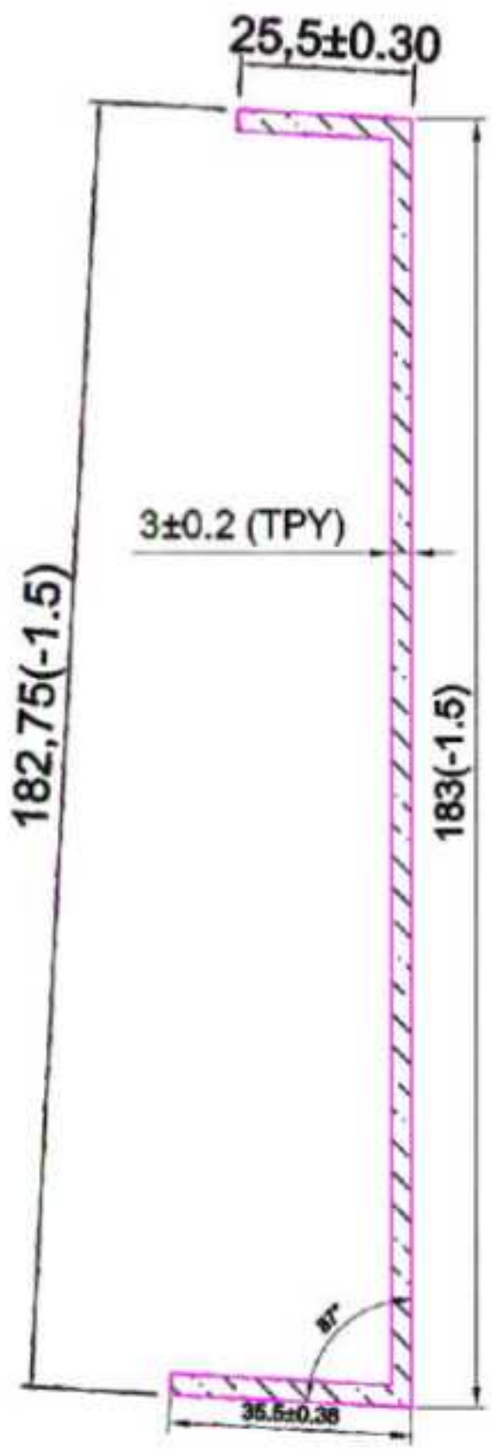

SECTION. NO. - ME - 006 WT. - 1.440 kg/12'

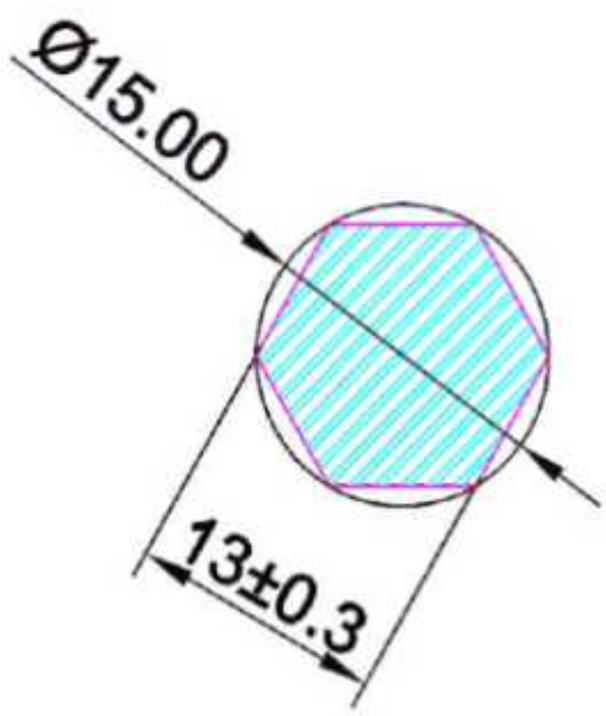

SECTION. NO. - ME - 007 WT. - 0.330 kg/12"

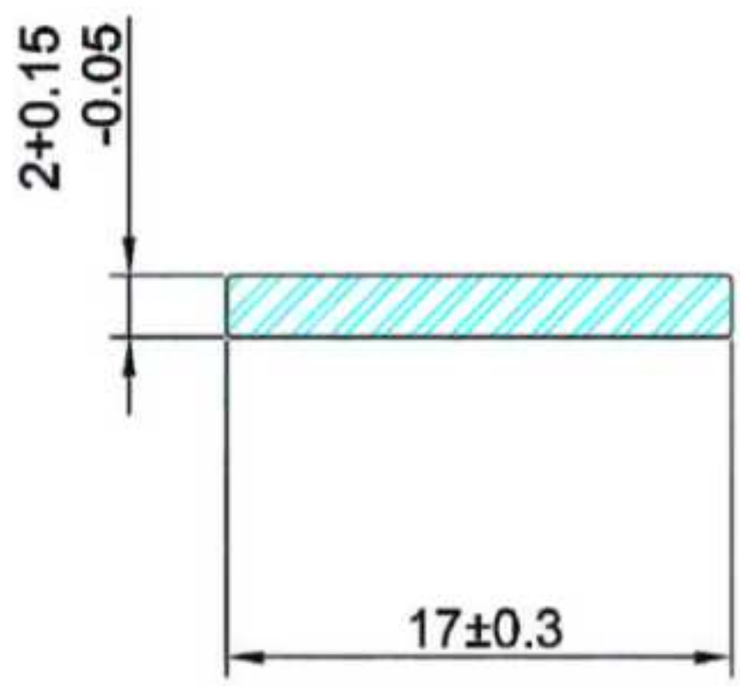

***ALL DIMENSION IN MM, CUT LENGTH IN FOOT AND WEIGHT RANGE IN KGS

VINCO ALUMINIUM PVT LTD

SECTION. NO. - ME 001 WT. - 6.250 kg/ 1800 mm

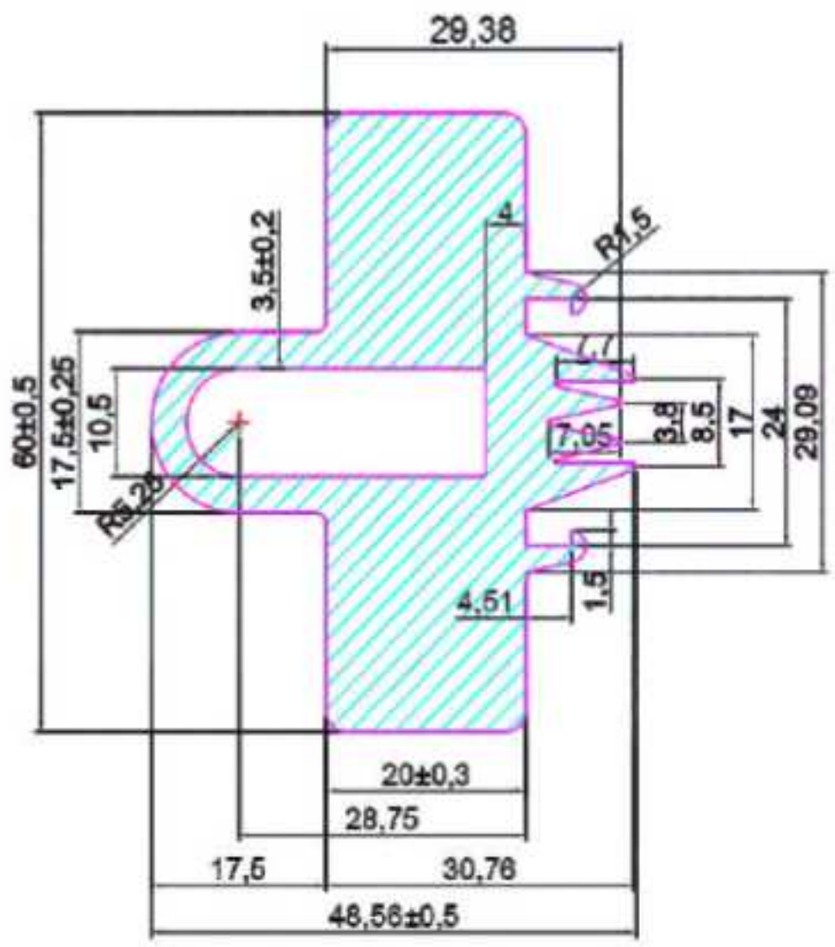

SECTION. NO. - ME 002 WT. - 8.400 kg/1800mm

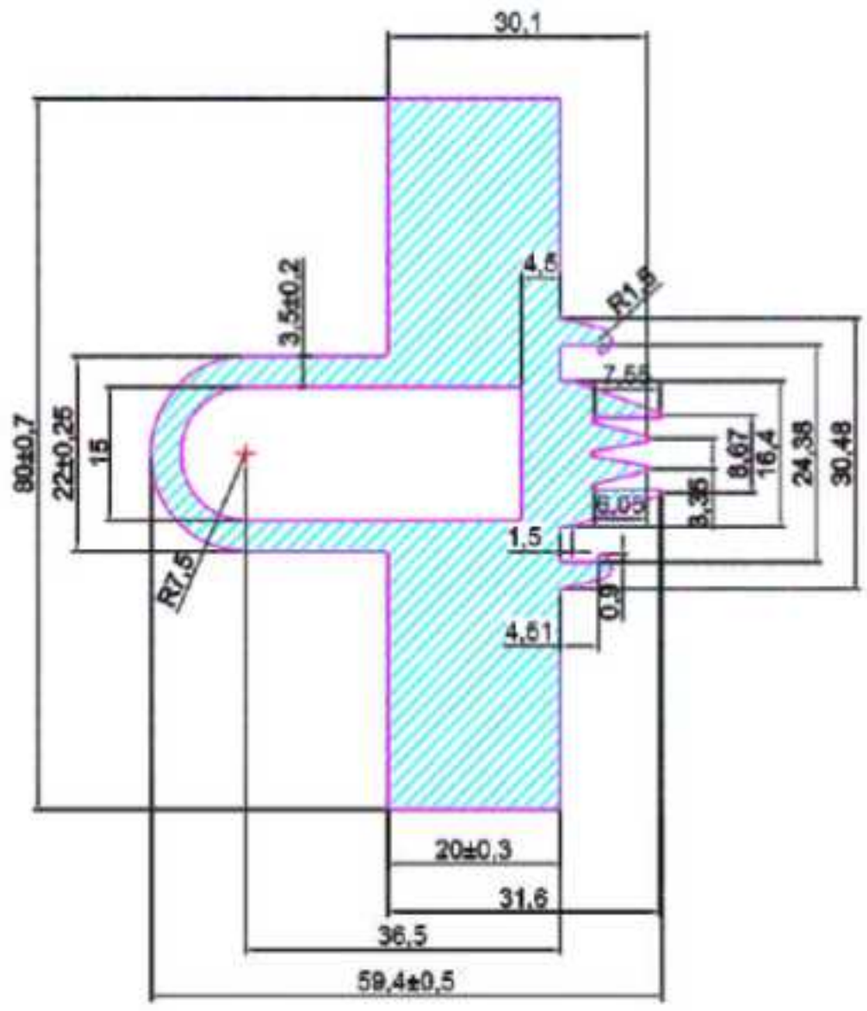

SECTION. NO. - ME 003 WT. - 12.250 kg/12'

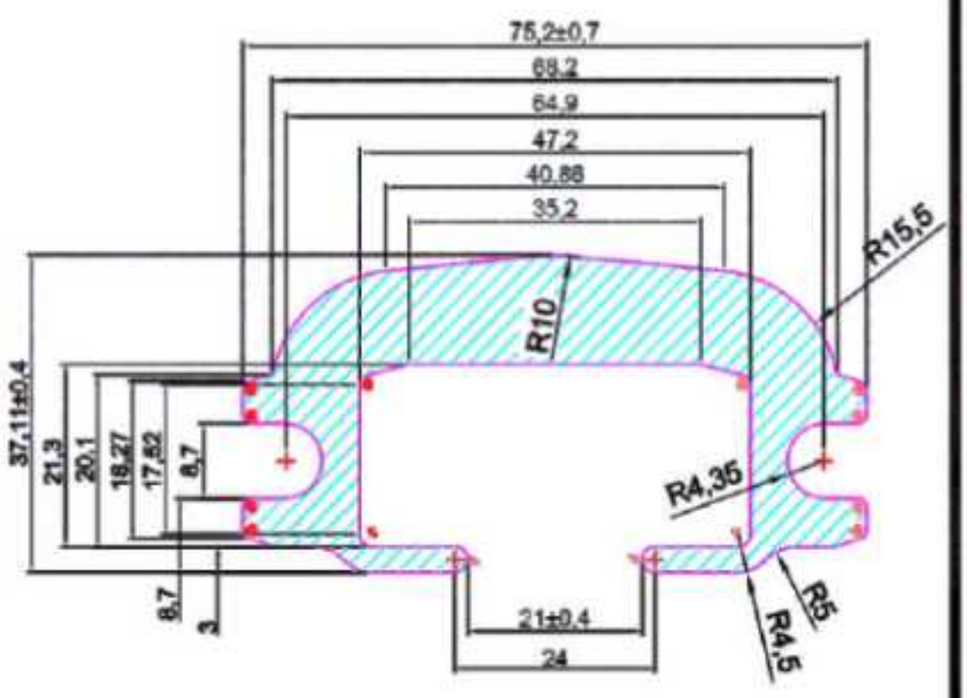

SECTION. NO. - ME 004 WT. - 1.050 kg/12"

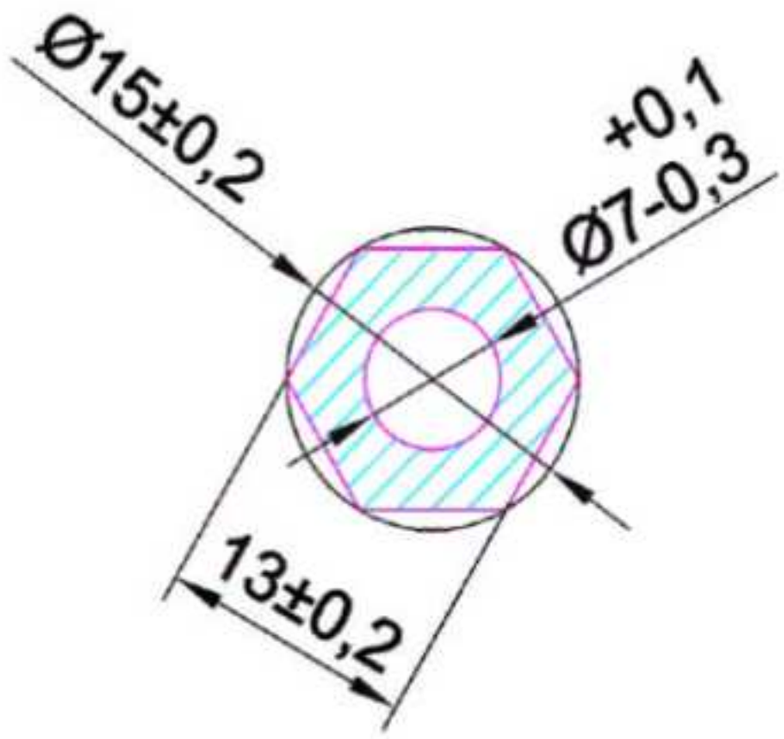

***ALL DIMENSION IN MM, CUT LENGTH IN FOOT AND WEIGHT RANGE IN KGS

VINCO ALUMINIUM PVT LTD

SECTION. NO. - VC - 5656 WT. - 7.400 kg/12

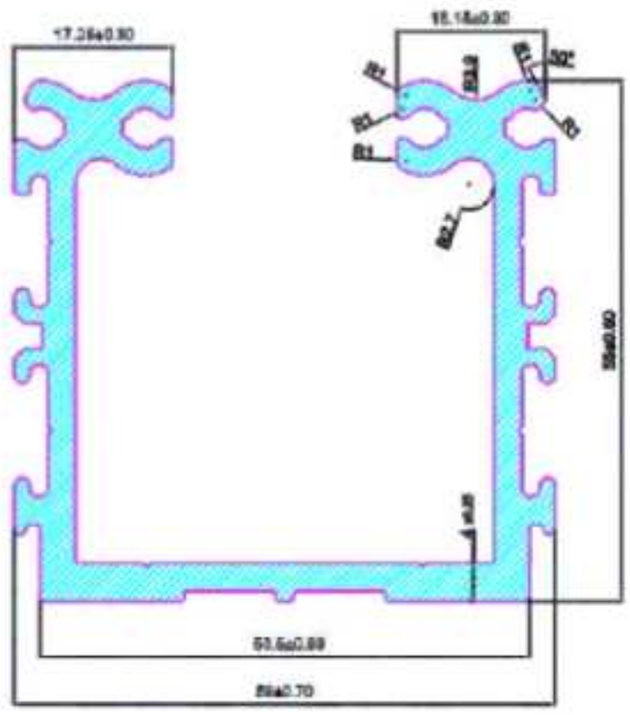

SECTION. NO. - 4804 WT. - 9.700 kg/12"

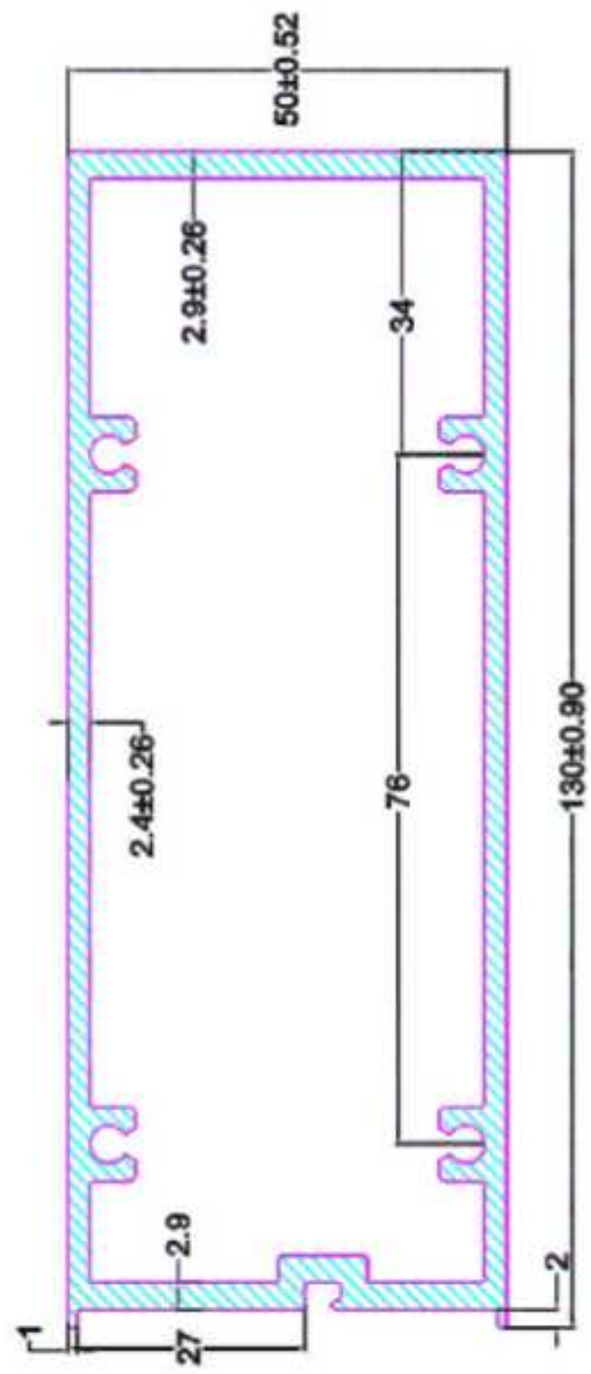

SECTION. NO. - VC - 009 WT. - 5.188 kg/12

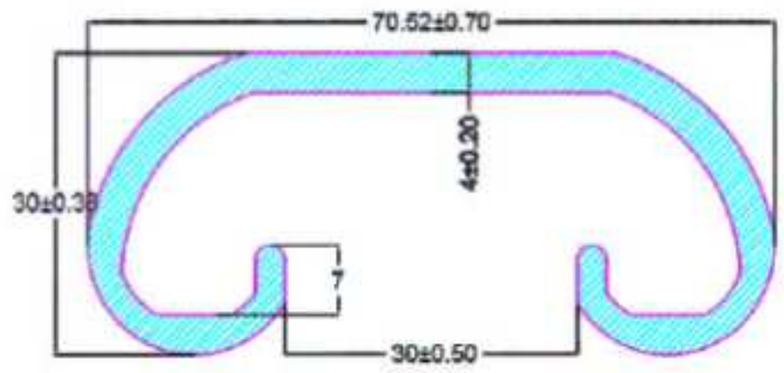

SECTION. NO. - VC - 008 WT. - 4.540 kg/ 12'

SECTION. NO. - VC - 0002 WT. - 4.952 kg/12"

***ALL DIMENSION IN MM, CUT LENGTH IN FOOT AND WEIGHT RANGE IN KGS

VINCO ALUMINIUM PVT LTD

SECTION. NO. - VC - 006 WT. - 7.734 kg/12

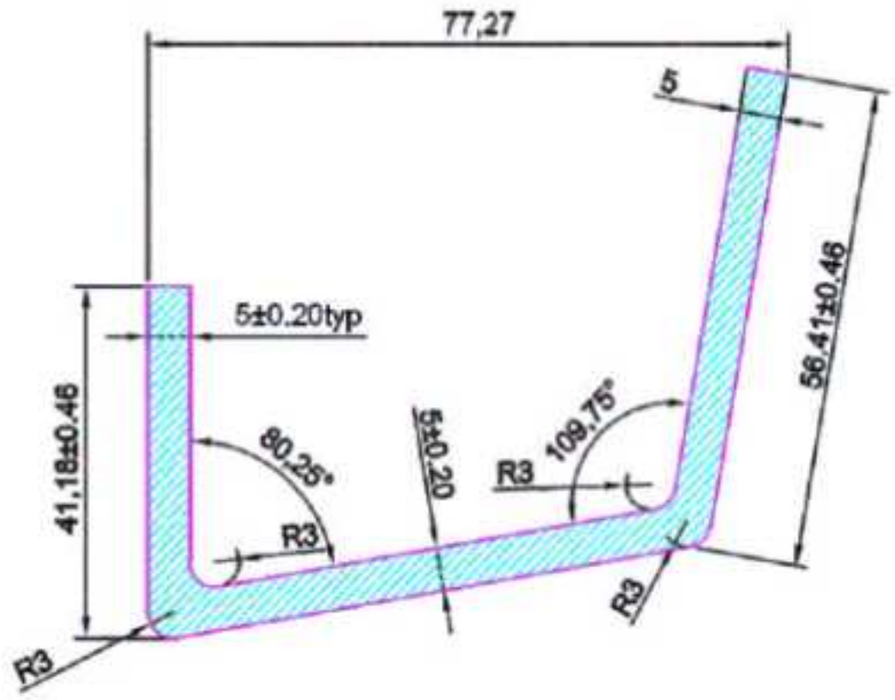

SECTION. NO. - VC - 007 WT. - 5.600 kg/12

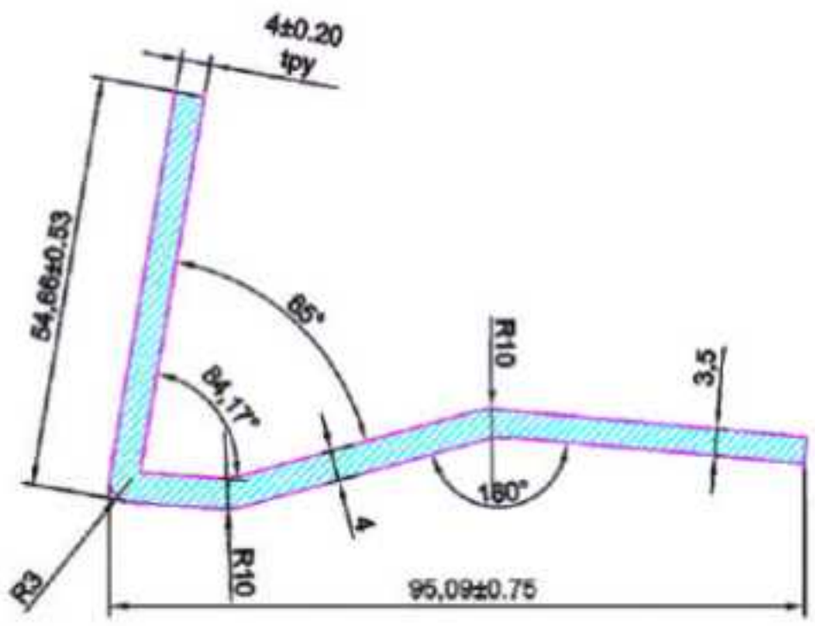

SECTION. NO. - VC - 008 WT. - 4.540 kg/ 12'

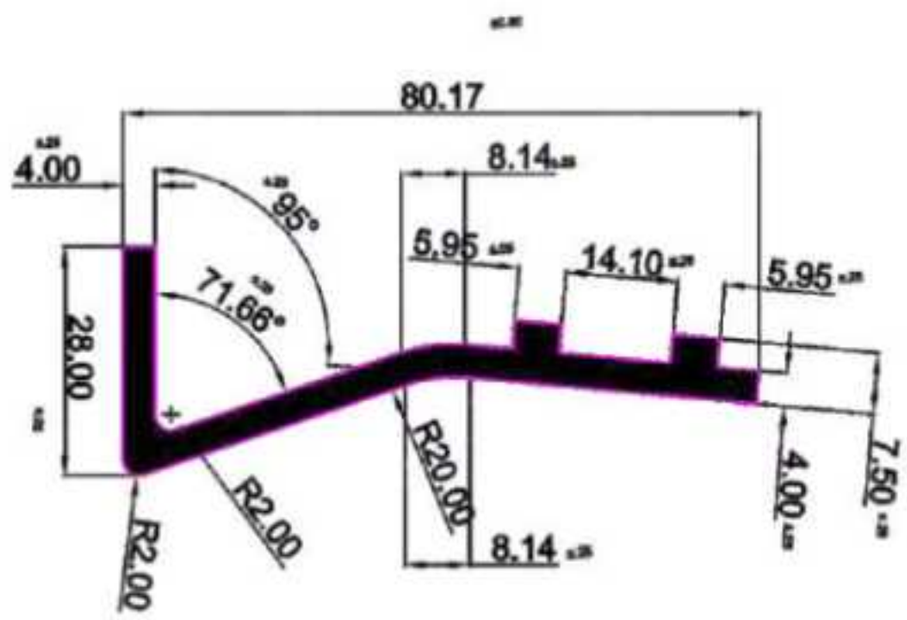

SECTION. NO. - VC - 0001 WT. - 8.660 kg/12"

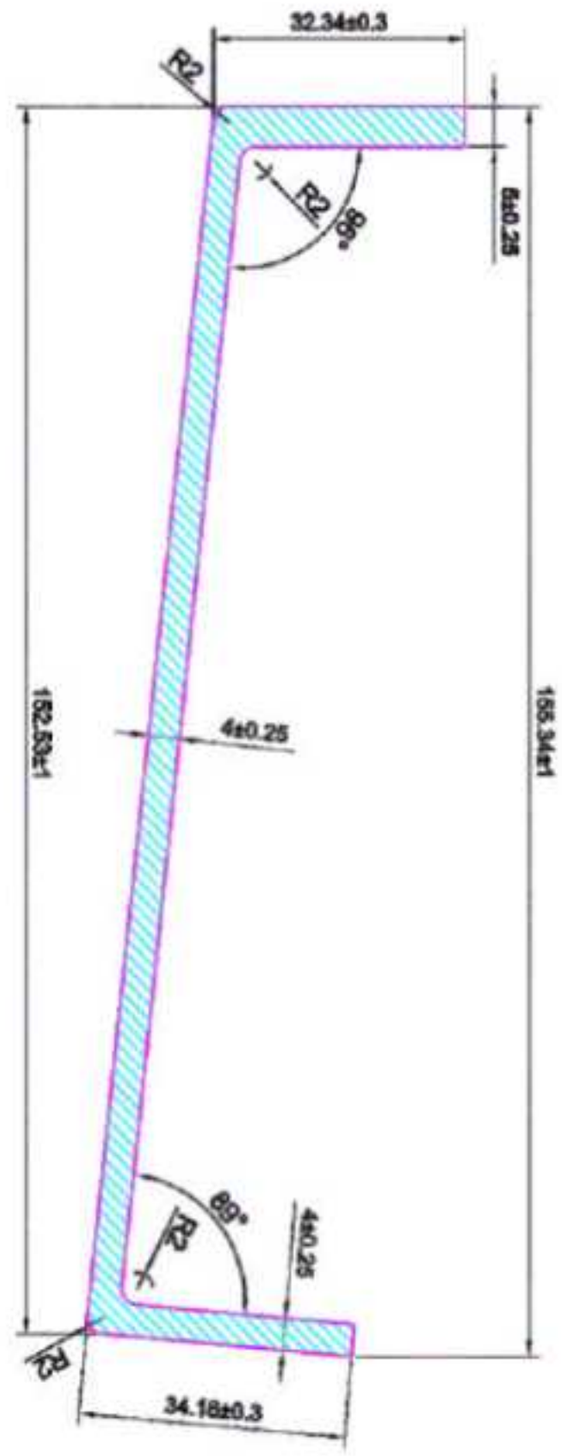

SECTION. NO. - VC - 0002 WT. - 4.952 kg/12"

***ALL DIMENSION IN MM, CUT LENGTH IN FOOT AND WEIGHT RANGE IN KGS

VINCO ALUMINIUM PVT LTD

SECTION. NO.- VC - 003 H WT. - 1.950 kg/ 12'

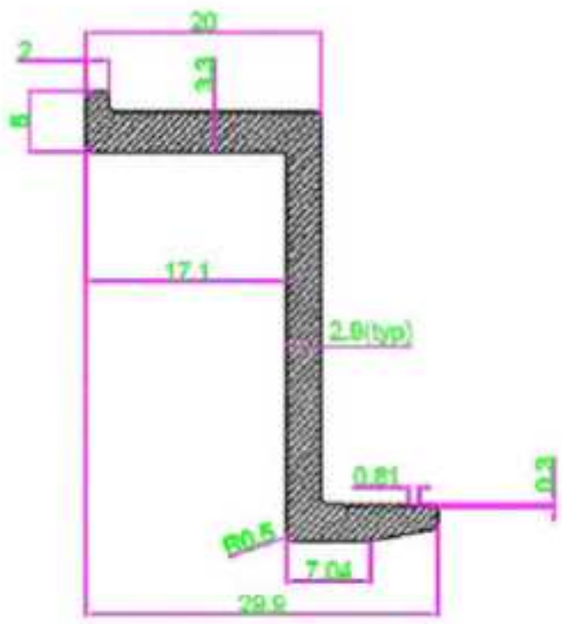

SECTION. NO. - VC- 003 WT. - 1.714 kg/12'

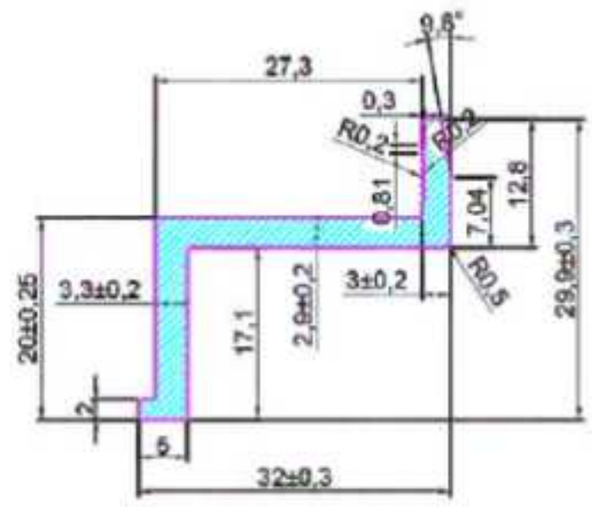

SECTION. NO. - VC - 004 WT. - 9.200 kg/12'

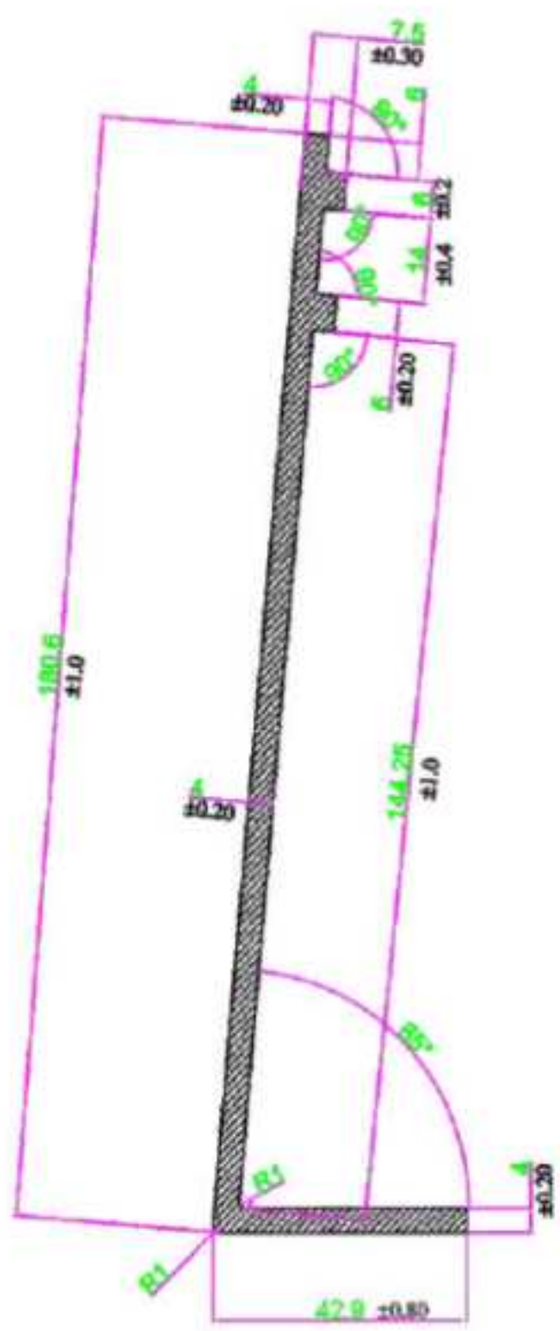

SECTION. NO. - VC - 005 WT. - 6.330 kg/12"

***ALL DIMENSION IN MM, CUT LENGTH IN FOOT AND WEIGHT RANGE IN KGS

VINCO ALUMINIUM PVT LTD

SECTION. NO. - VC - 001 WT. - 13.190 kg/ 12'

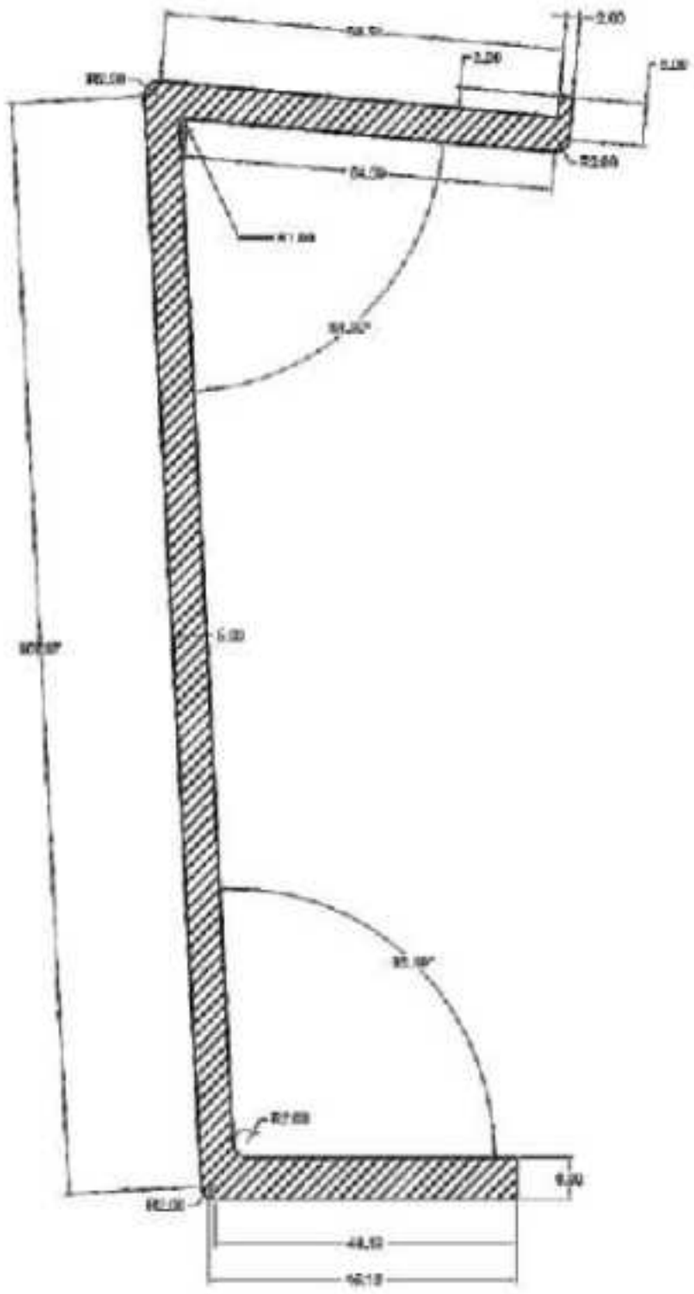

SECTION. NO. - VC- 001 WT. - 10.700 kg/12'

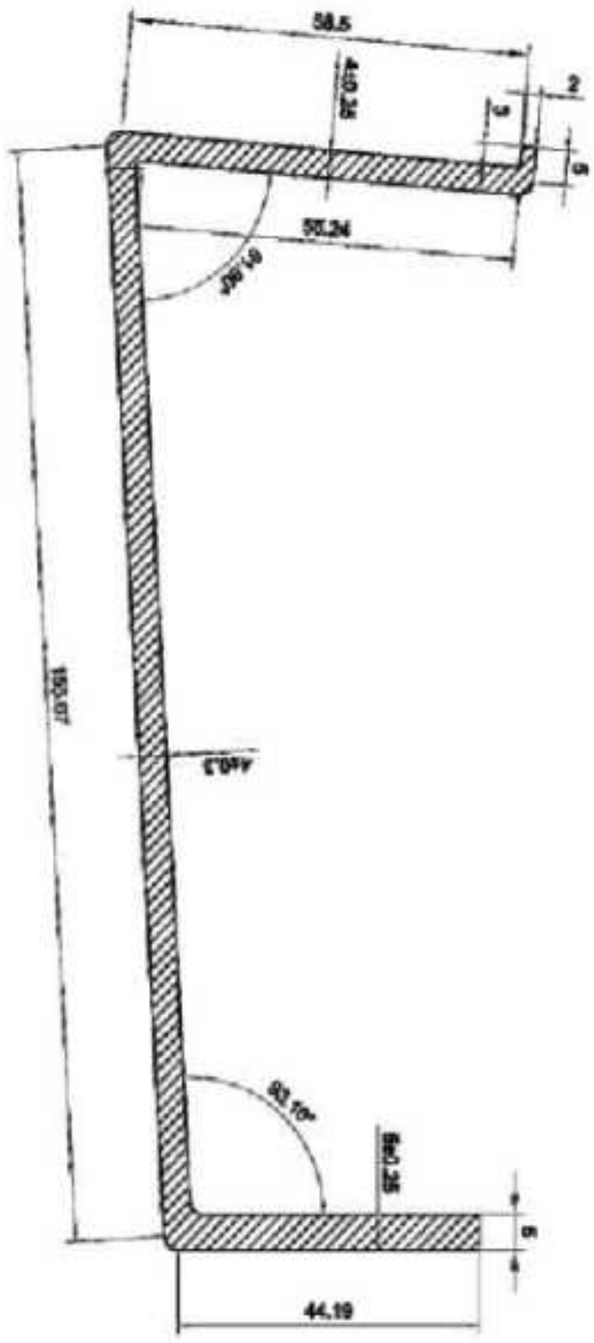

SECTION. NO. - VC - 002 WT. - 7.698 kg/12'

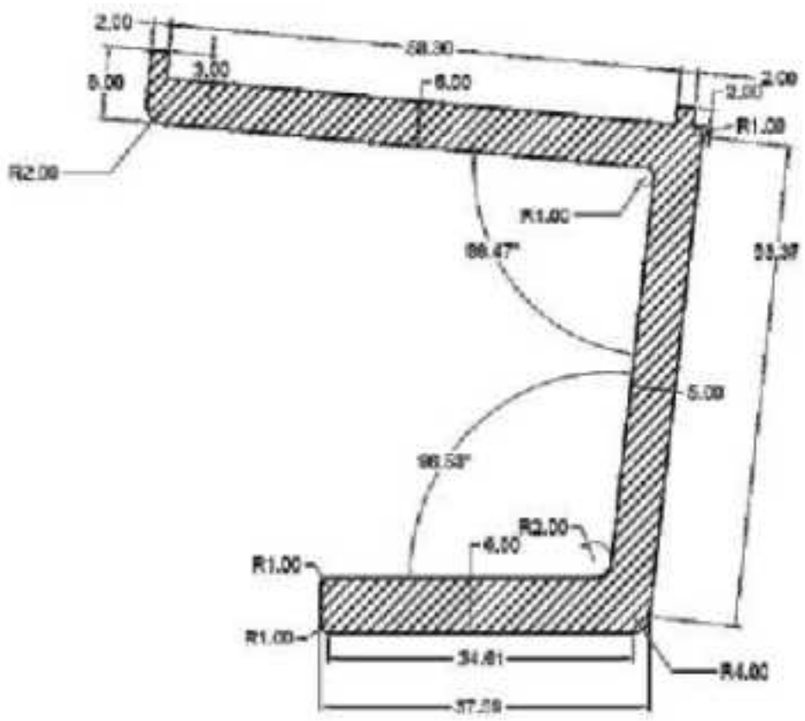

SECTION. NO. - VC - 002 WT. - 6.326 kg/12"

***ALL DIMENSION IN MM, CUT LENGTH IN FOOT AND WEIGHT RANGE IN KGS

VINCO ALUMINIUM PVT LTD

SECTION. NO. - 35678 WT. - 6.900 kg/12"

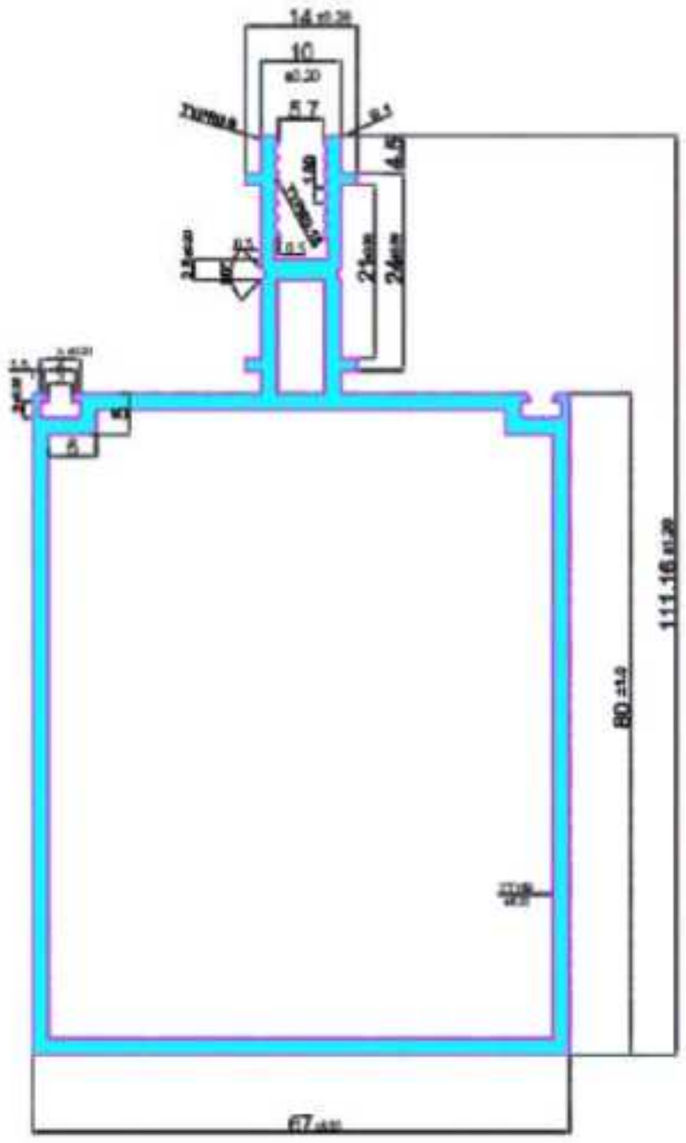

SECTION. NO. - 35066 WT. - 2.612 kg/ 12'

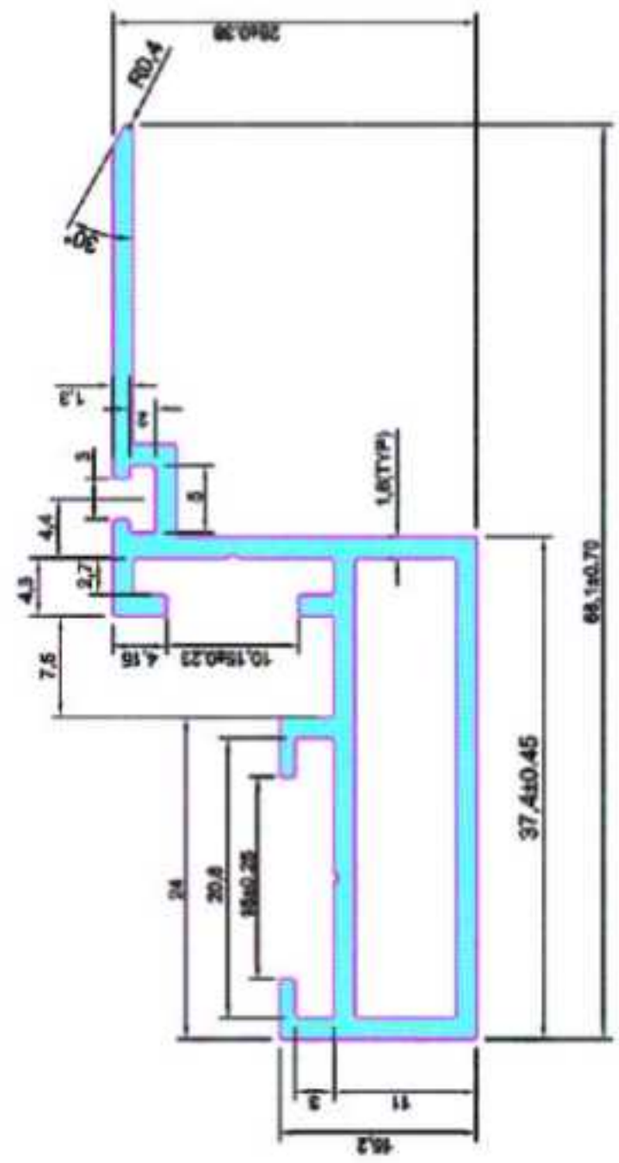

SECTION. NO. - 36077 WT. - 2.585 kg/12'

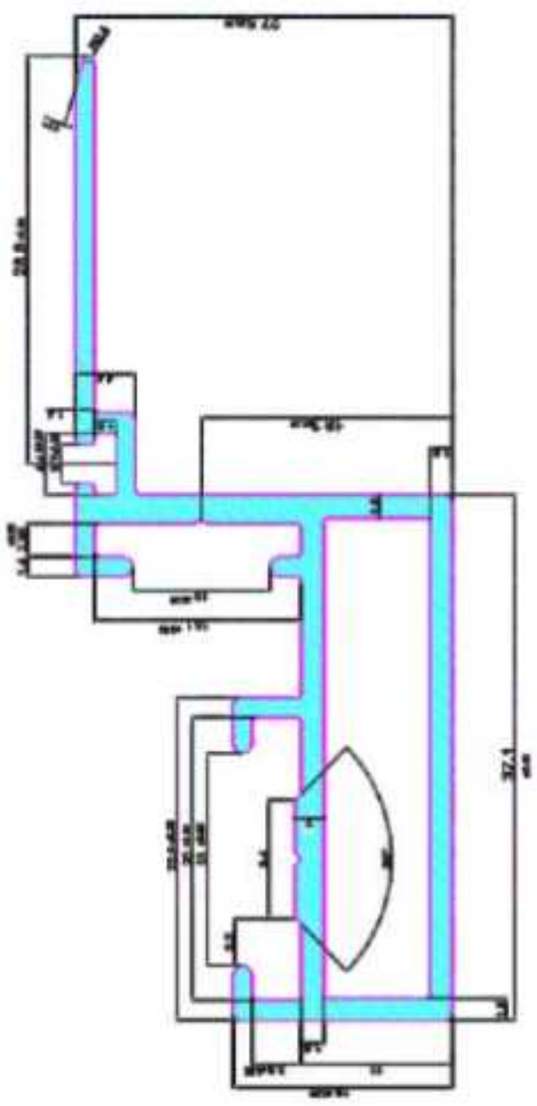

SECTION. NO. - VC - 794 WT. - 1.700 kg/12'

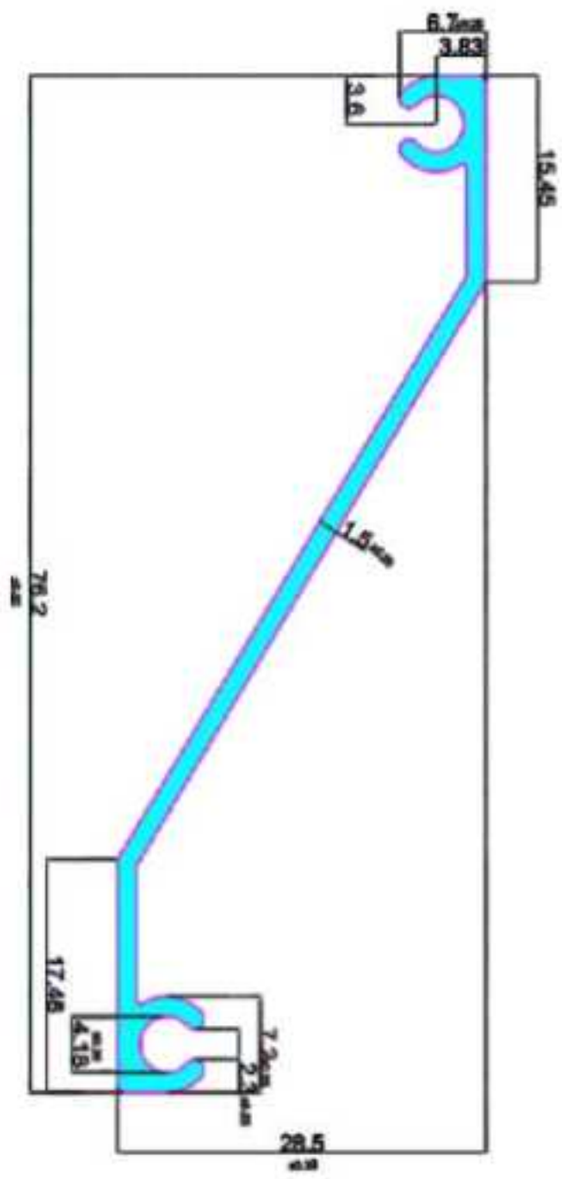

***ALL DIMENSION IN MM, CUT LENGTH IN FOOT AND WEIGHT RANGE IN KGS

VINCO ALUMINIUM PVT LTD

RECTANGULAR TUBES:

WEIGHT :
0.600 -9.50 KG/12'

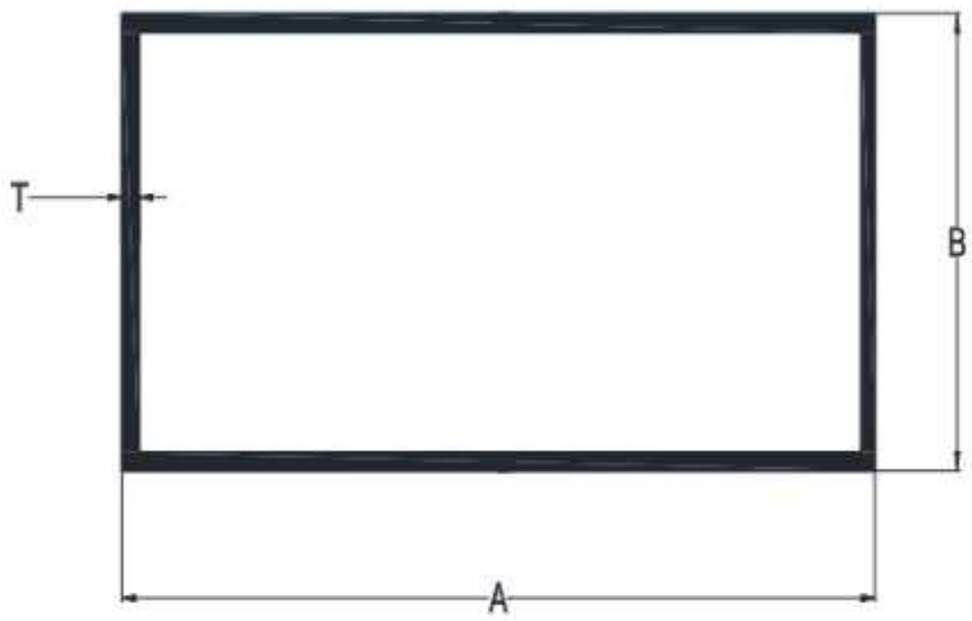

SEC.NO.	C/L	A	B	T	WEIGHT RANGE
1039	12	52.00	38.00	2.50	4.900-5.300
1040	12	100.00	50.00	3.00	9.100-9.500
1041	12	63.00	38.00	2.00	4.000-4.500
1042	12	36.00	24.00	2.00	2.300-2.500
1043	12	75.00	19.00	1.80	3.300-3.600
1044	12	75.00	19.00	1.40	2.500-2.600
1045	12	81.00	38.00	1.10	2.500-2.600
1046	12	63.00	38.00	1.80	3.400-3.500
1047	12	70.00	20.00	1.80	3.300-3.400
1048	12	60.00	40.00	2.00	3.750-3.850
1049	12	48.00	24.00	3.00	4.000-4.100
VC - 100	12	48.00	12.50	1.50	1.700-1.800
VC - 101	12	75.00	12.50	1.20	2.100-2.200
VC - 102	12	48.00	19.00	1.50	1.600-1.700
VC - 103	12	75.00	12.00	3.00	5.000-5.100
VC - 104	12	75.00	19.00	3.00	5.200-5.300
VC - 105	12	75.00	25.00	3.00	5.600-5.700
VC - 106	12	100.00	12.00	3.00	6.300-6.400
VC - 107	12	25.00	12.00	1.10	0.850-0.950
VC - 108	12	40.00	20.00	1.40	1.500-1.600
VC - 109	12	38.00	12.00	0.75	0.740-0.840
VC - 110	12	100.00	50.00	1.50	4.200-4.500

SQUARE TUBES:

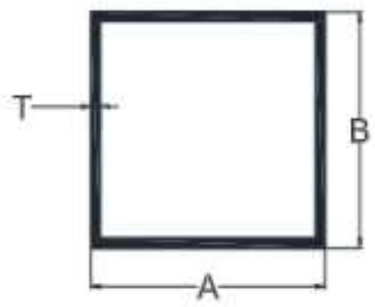

WEIGHT :
0.800 -5.90 KG/12'

SEC.No	C/L	A	B	T	WEIGHT
1050	12	19.00	19.00	1.20	0.800-1.100
1051	12	19.00	19.00	2.00	1.300-1.450
1055	12	25.00	25.00	0.78	0.750-0.850
1052	12	25.00	25.00	0.95	0.900-1.000
1056	12	25.00	25.00	1.65	1.500-1.700
1053	12	38.00	38.00	1.09	1.600-1.800
1057	12	38.00	38.00	1.50	2.100-2.400
1058	12	38.00	38.00	2.00	2.800-3.100
1054	12	50.00	50.00	1.06	2.000-2.200
1059	12	50.00	50.00	1.40	2.600-2.800
1060	12	50.00	50.00	2.00	3.800-4.100
1061	12	50.00	50.00	3.00	5.800-5.900
1062	12	50.00	50.00	2.50	4.900-5.000

***ALL DIMENSION IN MM, CUT LENGTH IN FOOT AND WEIGHT RANGE IN KGS

VINCO ALUMINIUM PVT LTD

DOOR BOTTOM:

SEC.No	C/L	A	B	C	T	WEIGHT RANGE
1240	12	83.50	44.45	9.50	1.20	3.200-3.500
1241	12	83.50	44.45	9.50	1.50	3.900-4.100
1242	12	83.50	44.45	9.50	2.00	5.000-5.300
1243	12	83.50	44.45	9.50	3.00	7.300-7.500
1249	16	101.00	44.45	25.40	1.15	4.500-5.000
1251	16	101.00	44.45	25.40	1.25	4.800-5.200
1250	16	101.00	44.45	25.40	3.00	12.00-14.00
1244	12	114.30	44.45	10.10	1.20	3.900-4.100
1245	12	114.30	44.45	10.10	1.50	4.800-5.000
1246	12	114.30	44.45	10.10	3.00	9.100-9.500
1247	16	114.3	44.45	25.40	1.5	6.400-6.600
1248	16	114.3	44.45	25.40	2.5	10.300-10.500

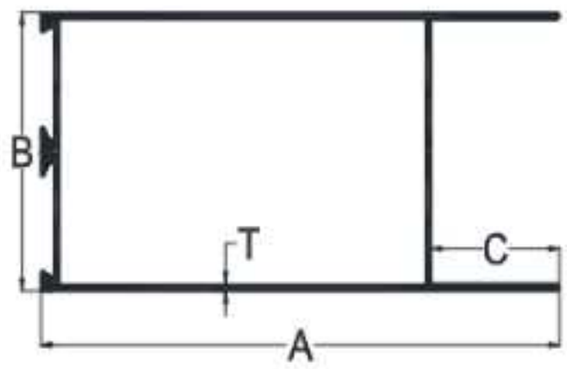

DOOR VERTICAL:

SEC.No.	C/L	A	B	T	WEIGHT RANGE
1261	14	47.5	44.45	1.24	3.000-3.200
1266	14	47.5	44.45	1.5	3.700-4.000
1264	1	47.5	44.45	2	2.600-2.8Q0
1262	14	47.5	44.45	2.19	4.800-5.000
1267	14	47.5	44.45	2.5	5.200-5.500
1269	14	47.5	44.45	3	6.000-6.500
1265	14	83.5	44.45	1.35	4.500-4.700
1263	14	83.5	44.45	2	6.100-6.300
1268	14	83.5	44.45	3	9.000-9.500

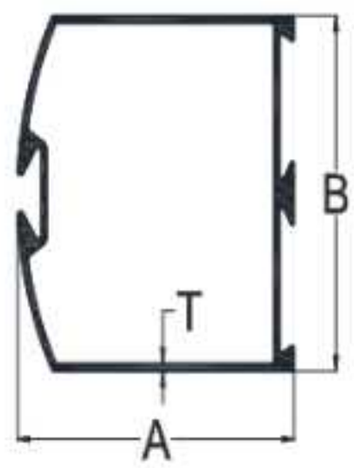

GLAZING CLIP:

SEC.No.	C/L	A	B	T	WEIGHT RANGE
1280	12	18.40	17.00	0.52	0.240-0.260
1281	12	18.40	17.00	0.60	0.260-0.280
1282	12	18.40	17.00	0.65	0.280-0.320
1283	12	18.40	17.00	0.75	0.350-0.380

SEC.No.	C/L	A	B	T	WEIGHT RANGE
2251	12	32.00	26.07	0.75	0.450-0.480

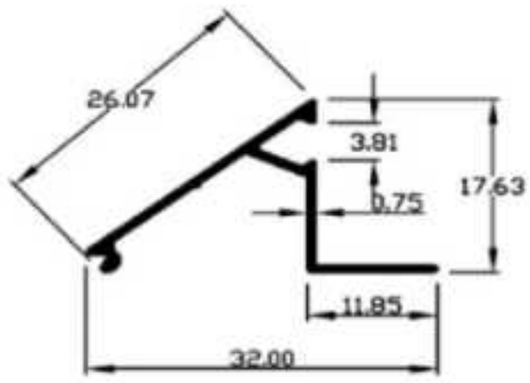

GLAZING PLATE:

SEC.So.	C/L	A	B	T	WEIGHT RANGE
1291	12	44.00	3.40	0.69	0.500-0.600
1292	12	44.00	3.40	0.78	0.600-0.700

***ALL DIMENSION IN MM, CUT LENGTH IN FOOT AND WEIGHT RANGE IN KGS

VINCO ALUMINIUM PVT LTD

SINGLE PARTITION:

SEC.No.	C/L	A	B	T	WEIGHT RANGE
1081	16	50.00	25.00	0.87	1.900-2.100
1090	16	50.00	25.00	1.40	2.200-2.500
1082	16	50.00	25.00	1.50	2.500-2.700
1083	16	63.00	38.00	0.94	2.500-2.700
1095	16	63.00	38.00	1.00	2.800-3.000
1091	16	63.00	38.00	1.10	3.000-3.300
1084	16	63.00	38.00	1.25	3.400-3.600
1096	16	63.00	38.00	1.50	4.100-4.400
1065	16	63.00	38.00	1.69	4.700-5.000
1086	16	63.00	38.00	1.97	5.300-5.500
1093	16	63.00	38.00	2.50	6.500-6.800
1092	16	63.00	38.00	3.00	7.600-8.100
1087	16	101.0	44.45	1.25	4.650-4.800
1094	16	101.0	44.45	1.60	6.400-6.800
1088	16	101.0	44.45	2.00	7.700-7.900
1089	16	101.0	44.45	3.00	11.40-11.60

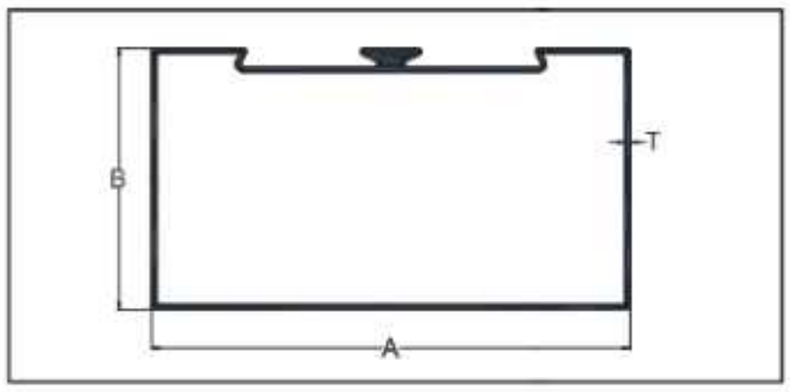

WEIGHT :
1.90 -11.60 KG/12'

SINGLE PARTITION:

SEC.No.	C/L	A	B	T	WEIGHT RANGE
1121	16	50.00	25.00	0.75	1.900-2.100
1122	16	50.00	25.00	1.40	2.500-2.700
1123	16	63.00	38.00	0.84	2.500-2.700
1135	16	63.00	38.00	0.9	2.800-3.000
1131	16	63.00	38.00	1.05	3.000-3.300
1124	16	63.00	38.00	1.16	3.500-3.700
1125	16	63.00	38.00	1.27	3.800-4.100
1136	16	63.00	38.00	1.45	4.200-4,500
1126	16	63.00	38.00	1.60	4.800-5.000
1127	16	63.00	38.00	2.00	6.100-6.500
1133	16	63.00	38.00	2.50	7.600-0.000
1132	16	63.00	38.00	3.00	8.000-8.500
1128	16	101.0	44.45	1.20	4.650-4.800
1134	16	101.0	44.45	1.60	6.500-6.900
1129	16	101.0	44.45	1.90	7.700-7.900
1130	16	101.0	44.45	3.00	11.70-11.90

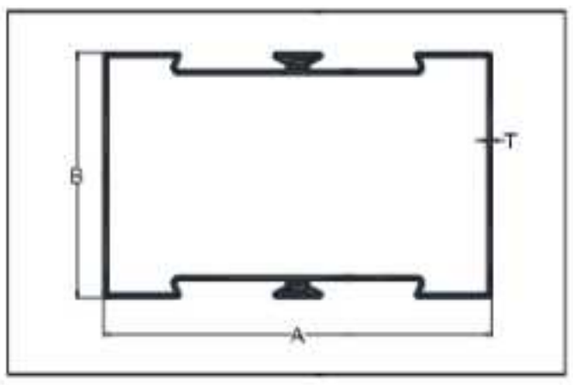

WEIGHT :
1.90 -11.90 KG/12'

***ALL DIMENSION IN MM, CUT LENGTH IN FOOT AND WEIGHT RANGE IN KGS

VINCO ALUMINIUM PVT LTD

DOOR MIDDLE SINGLE:

SEC.No.	C/L	A	B	T	WEIGHT RANGE
1161	12	47.50	44.45	1.15	2.200-2.350
1162	12	47.50	44.45	1.50	2.800-2.950
1163	12	47.50	44.45	2.00	3.600-3.750
1164	12	47.50	44.45	2.50	4.400-4.600
1165	12	83.50	44.45	1.45	3.800-4.000
1166	12	83.50	44.45	2.00	5.000-5.200

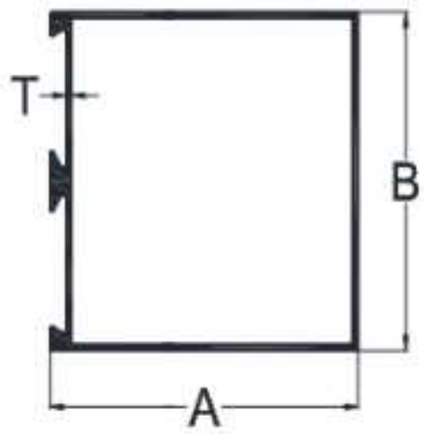

DOOR MIDDLE DOUBLE:

SEC.No.	C/L	A	B	T	WEIGHT RANGE
###	12	47.50	44.45	0.90	1.900-2.200
###	12	47.50	44.45	1.05	2.300-2.450
1187	16	47.50	44.45	1.50	3.700-4.000
1182	t2	47.50	44.45	2.00	3.800-3.950
1183	12	47.50	44.45	2.55	4.600-4.800
###	t2	83.50	44.45	1.40	3.800-4,000
1185	12	83.50	44.45	2.00	5.200-5.400
1188	12	101.0	44.45	1.15	3.500-3.800
1190	t2	101.0	44.45	1.50	4.800-5.200
1186	16	101.0	44.45	2.00	8.600-9.000
1189	16	101.0	44.45	3.00	11.00-13.00

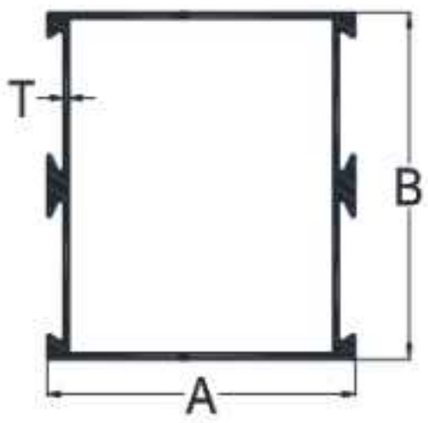

3/4" TWO TRACK TOP :

SEC.No	C/L	A	B	C	T	WT. RANGE
1331	12	61.85	31.75	23.68	0.65	1.200-1.400
1332	12	61.85	31.75	23.68	0.75	1,400-1.600
1333	12	61.85	31.75	23.68	0.84	1.600-1.800
1334	12	61.85	31.75	23.68	0.94	HOLLOW
1335	12	61.85	31.75	23.68	1.04	2.000-2.200
1336	12	61.85	31.75	23.68	1.14	2.200-2.500
1337	12	61.85	31.75	23.68	1.40	2.700-2.900

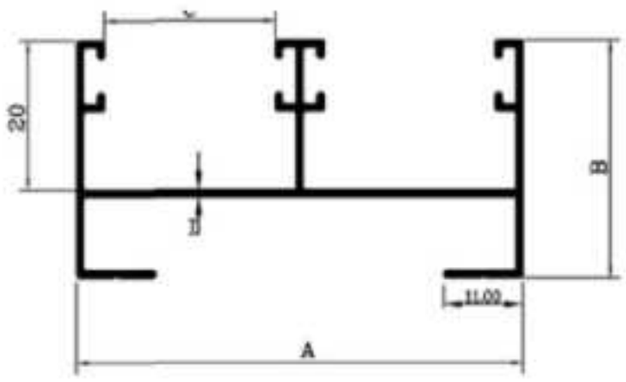

3/4" TWO TRACK BOTTOM :

SEC.No	C/L	A	B	C	T	WT. RANGE
1351	12	61.85	31.75	24.50	0.65	1.500-1.700
1352	12	61.85	31.75	24.50	0.85	1.700-1.900
1353	12	61.85	31.75	24.50	1.00	2.000-2.200
1354	12	61.85	31.75	24.50	1.10	2.200-2.500
1355	12	61.85	31.75	24.50	1.37	3.000-3.350
1356	12	61.85	31.75	24.50	1.55	3.100-3.400

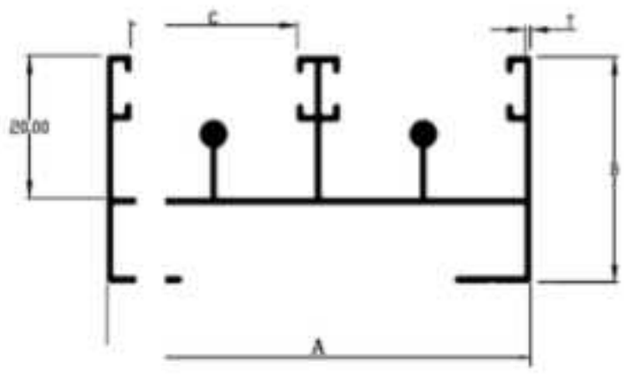

3/4" TWO TRACK BOTTOM HOLLOW:

SEC. NO: —1451

WEIGHT:- 3.700-3.900 kg/12

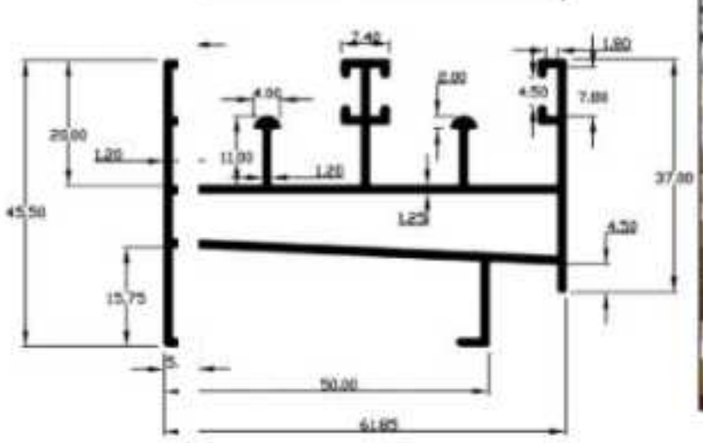

***ALL DIMENSION IN MM, CUT LENGTH IN FOOT AND WEIGHT RANGE IN KGS

VINCO ALUMINIUM PVT LTD

CURTAIN WALL:

SEC.No.	C/L	A	B	C	T	WEIGHT RANGE
1317	16	50.00	50.00	10.00	1.10	3.300-3.500
1316	16	50.00	50.00	5.00	1.15	2.300-3.500
1318	16	50.00	50.00	5.00	1.30	3.800-4.100
1321	16	63.00	57.00	5.00	1.73	5.500-5.700
1921	15	80.00	50.00	6.00	1.50	4.480-5100

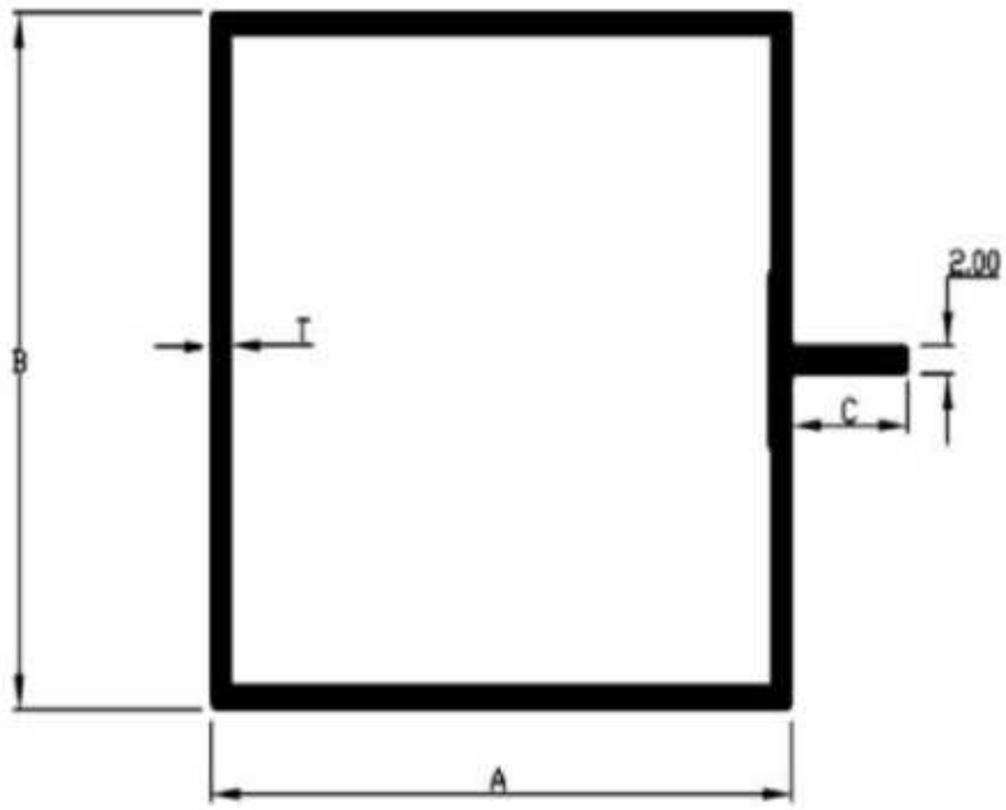

SEC.No.	C/L	A	B	C	T	WEIGHT RANGE
1931	16	104.0	55.00	96.00	1.70	7.500-8.500
1932	16	104.0	55.00	96.00	2.00	8.500-9.500
1933	16	75.0	55.00	67.00	1.70	6.200-6.800

3/4" FOUR TRACK TOP :

SEC.No	C/L	A	B	T	WT. RANGE
1411	12	122.40	31.50	0.97	3.300-3.600
1412	12	122.40	31.50	1.30	4.180-4.500
1413	12	122.40	31.50	1.50	4.800-5.100

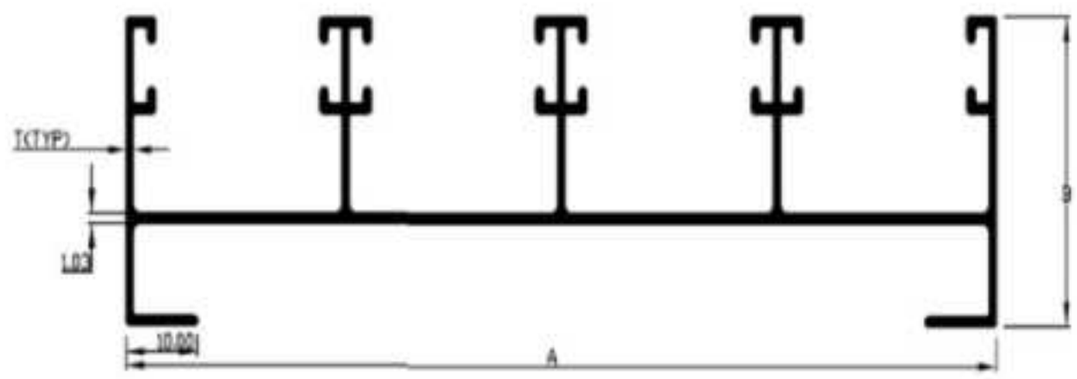

3/4" FOUR TRACK BOTTOM :

SEC.No	C/L	A	B	T	WT. RANGE
1421	12	122.4	31.50	1.00	4.000-4.500
1422	12	122.40	31.50	1.30	4.800-5.200
1423	12	122.40	31.50	1.50	5.600-6.200

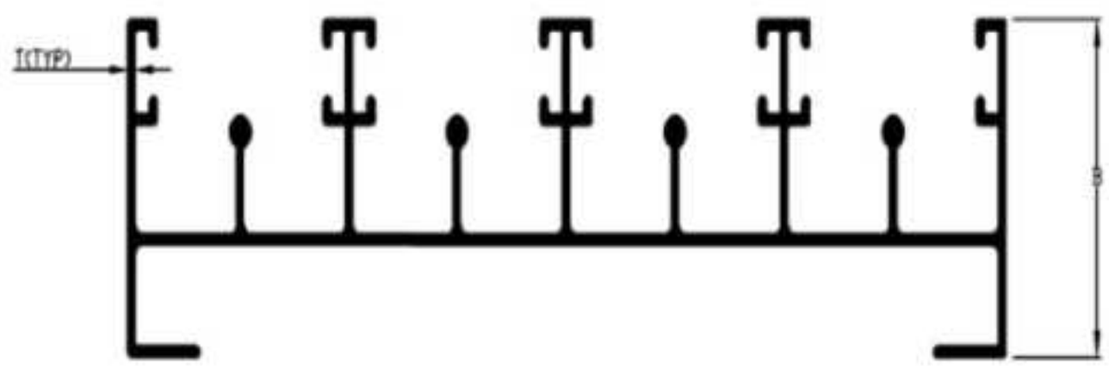

3/4" FOUR TRACK BOTTOM :

SEC.No	C/L	A	B	T	WT. RANGE
1431	12	122.40	31.50	1.00	3.650-4.200
1432	12	122.40	31.50	1.30	5.000-5.400
1433	12	122.40	31.50	1.50	5.800-6.200

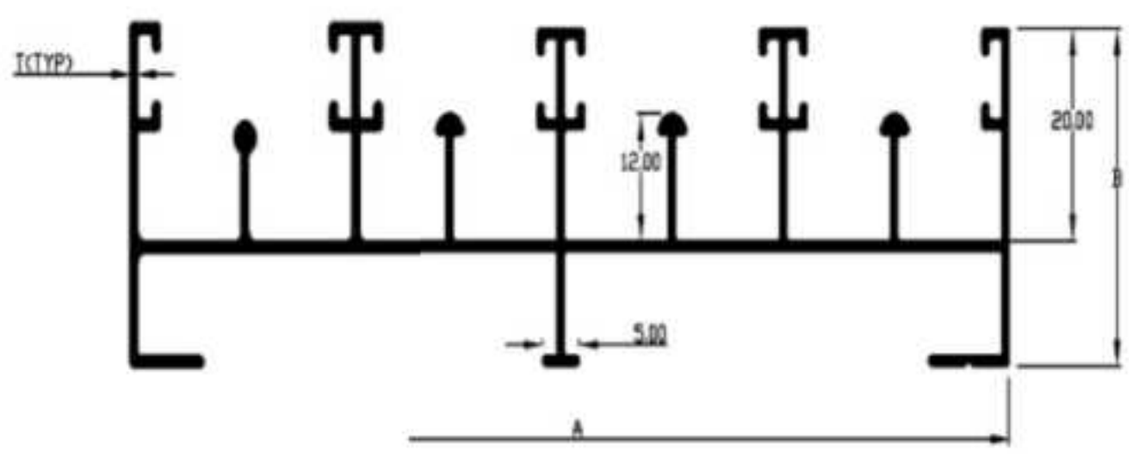

***ALL DIMENSION IN MM, CUT LENGTH IN FOOT AND WEIGHT RANGE IN KGS

VINCO ALUMINIUM PVT LTD

3/4" HANDLE :

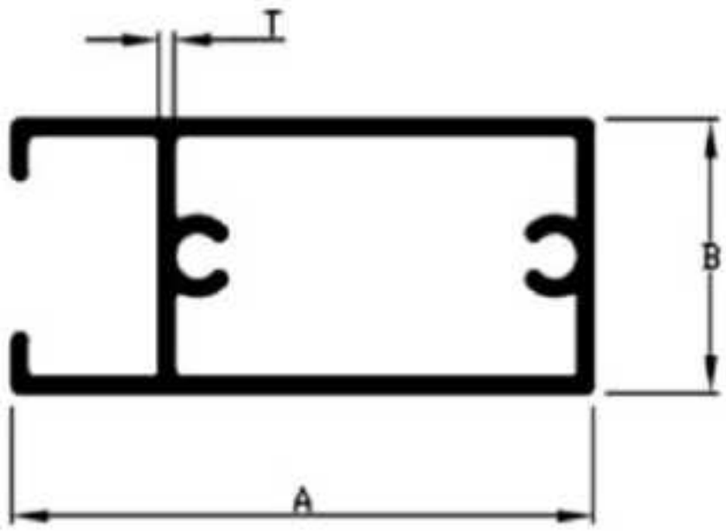

SEC.No.	C/L	A	B	T	WT. RANGE
1461	16	40.00	18	0.70	1.300-1.500
1462	16	40.00	18.00	0.95	1.750-1.950
1463	12	40.00	18.00	1.20	1.500-1.700
1464	16	4Q,00	18.00	1.50	2.500-2.700
1465	16	40.00	18.00	1.80	3.000-3.300

1" HANDLE :

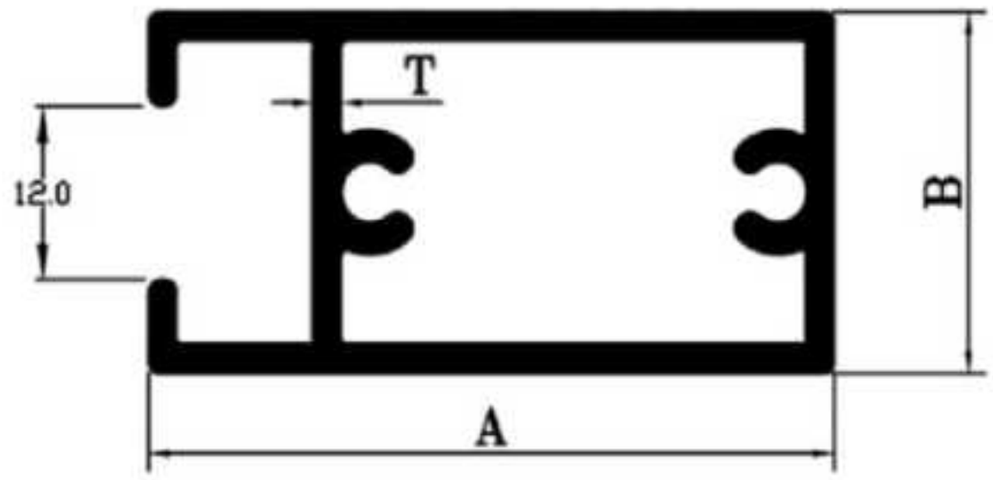

SEC.No.	C/L	A	B	T	WT. RANGE
1740	15	44.00	25.40	0.82	1.700-2.000
1741	15	50.00	25.00	0.85	1.800-2.100
1742	12	50.00	25.00	1.20	2.100-2.300
1743	12	50.00	25.00	1.30	2.260-2.400
1744	12	50.00	25.00	1.40	2.400-2.600
1745	12	50.00	25.00	1.50	2.600-2.800
1746	12	50.00	25.00	2.00	3.400-3.700

3/4" INTER LOCK:

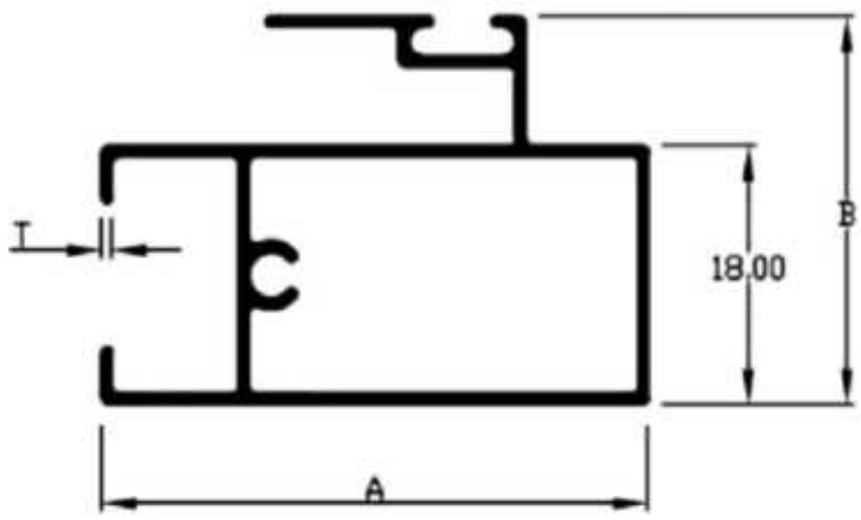

SEC.No.	C/L	A	B	T	WT. RANGE
1491	16	40.00	27.00	0.71	1.450-1.650
1492	16	40.00	27.00	0.84	1.750-1.950
1493	12	40.00	27.00	1.20	1.900-2.100
1494	16	4Q.00	27.00	1.50	3.100-3.300
1495	16	40.00	27.00	1.80	3.500-3.800

1" HANDLE :

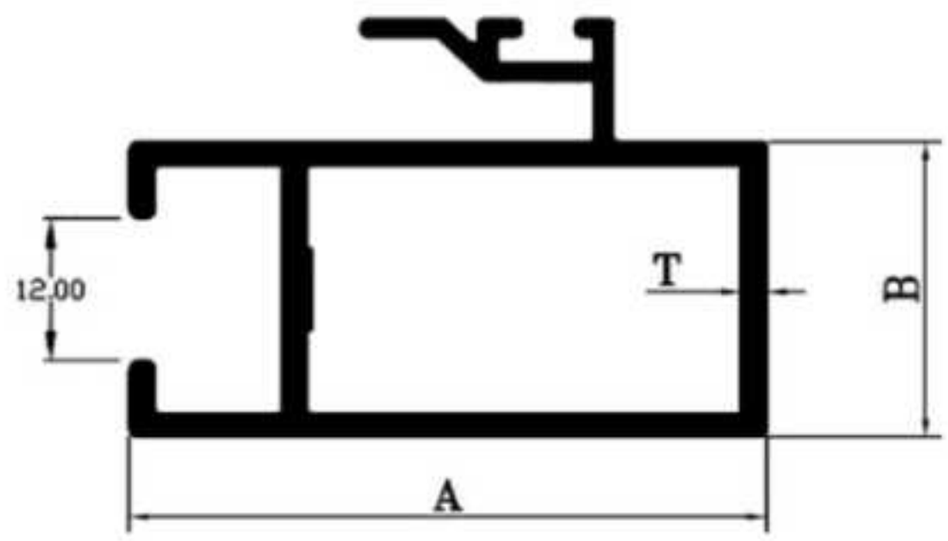

SEC.No.	C/L	A	B	T	WT. RANGE
1760	12	50.00	25.00	0.75	1.600-1.900
1765	12	50.00	25.00	1.12	2.150-2.250
1761	12	50.00	25.00	1.20	2.300-2.400
1762	12	50.00	25.00	1.30	2.400-2.600
1763	12	50.00	25.00	1.50	2.800-3.100
1764	12	50.00	25.00	2.00	3.500-3.750

***ALL DIMENSION IN MM, CUT LENGTH IN FOOT AND WEIGHT RANGE IN KGS

VINCO ALUMINIUM PVT LTD

20MM HANDLE:

SEC. No.	C/L	A	B	T	WT. RANGE
1641	12	38.00	20.00	0.92	1.100-1.300
1642	12	38.00	20.00	1.00	1.200-1.400
1645	12	38.00	20.00	1.20	1.500-1.700
1643	12	38.00	20.00	1.50	1.700-1.900
1644	12	38.00	20.00	1.65	1.900-2.100

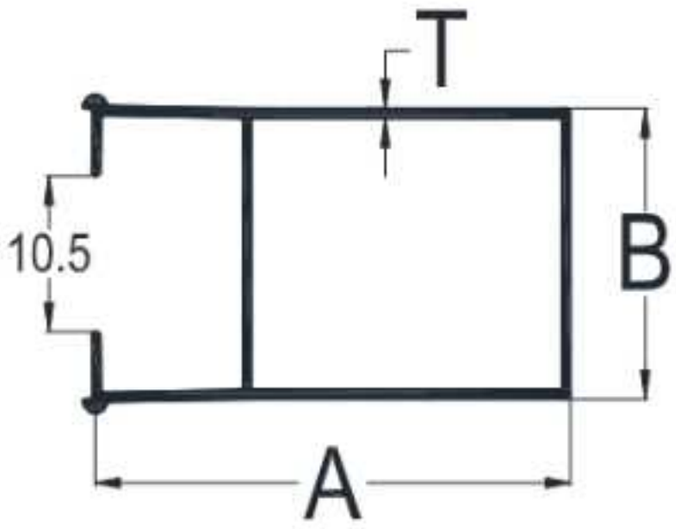

20MM INTERLOCK:

SEC. No.	C/L	A	B	T	WT. RANGE
1651	12	38.00	20.00	0.82	1.200-1.400
1655	12	38.00	20.00	1.00	1.400-1.600
1652	12	38.00	20.00	1.20	1.700-1.900
1653	12	38.00	20.00	1.50	2.000-2.200
1654	12	38.00	20.00	1.65	2.300-2.500

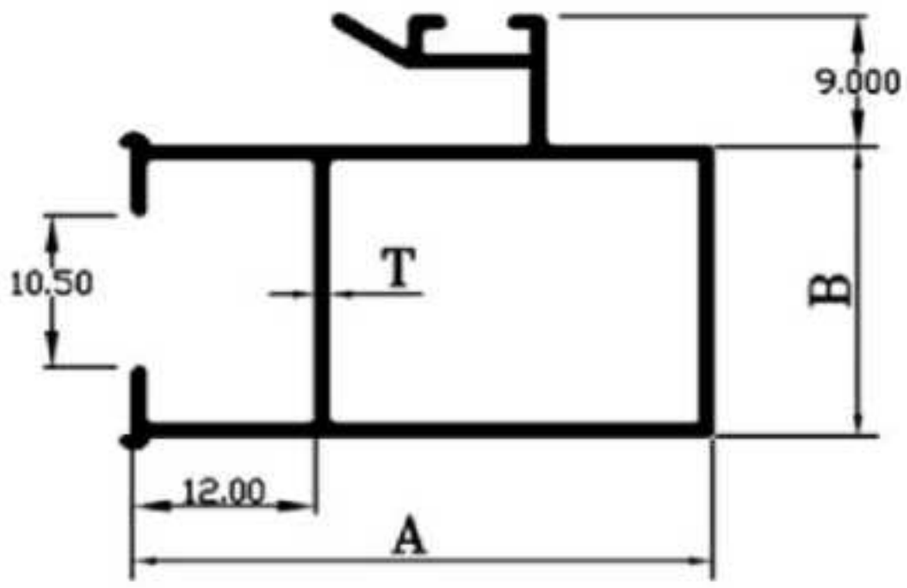

20MM TOP BOTTOM:

SEC. No.	C/L	A	B	T	WT. RANGE
1661	12	41. Q0	20. 00	0. 85	1. 000-1. 200
1665	12	41. 00	20. 00	1. 00	1. 200-1. 400
1663	12	41. 00	20. 00	1. 20	1. 400-1. 60D
1662	12	41. 00	20. 00	1. 50	1. 700-1. 900
1664	12	41. 00	20. 00	1. 65	2. 000-2. 300

SEC.No.	C/L	T	WEIGHT
1841	12	1.90	7.000-7.SOO
1842	12	1.33	5.000-5.500
1843	12	1.20	4.500-5.000

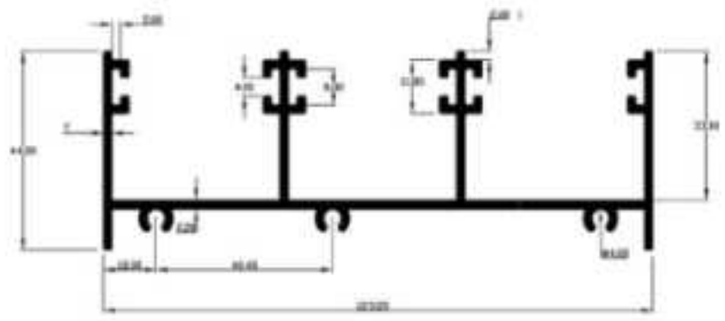

SEC.No.	C/L	T	WEIGHT
1851	12	1.90	9.000-9.500
1852	12	1.40	7.400-7.700
1853	12	1.20	6.600-7.100

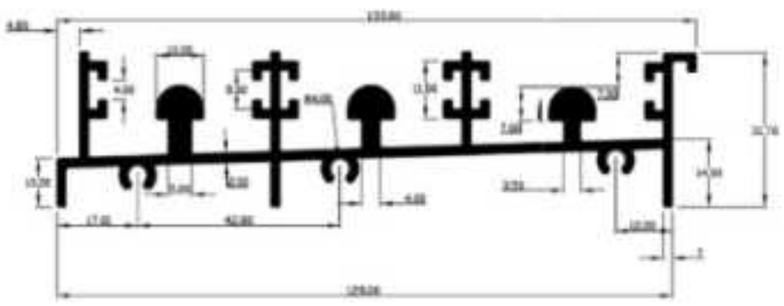

***ALL DIMENSION IN MM, CUT LENGTH IN FOOT AND WEIGHT RANGE IN KGS

VINCO ALUMINIUM PVT LTD

20MM TWO TRACK TOP:

SEC. NO	C/L	A	B	C	T	WT. RANGE
1560	16	62.00	29.50	23.80	0.70	2.100-2.200
1561	16	62.00	29.50	23.80	0.85	2.400-2.600
1562	16	62.00	29.50	23.40	1,10	2.800-3.000
1563	16	62.00	29.50	23.80	1.50	4.000-4.200
1564	16	62.00	29.50	23.80	1.65	4.500-4.800
1565	16	62.00	29.50	23.80	2.00	4.800-5.000

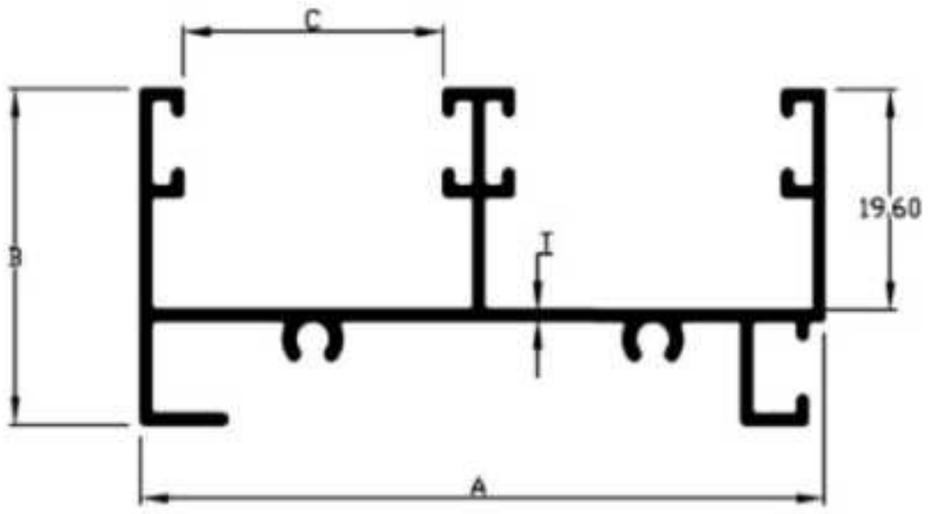

20MM TWO TRACK BOTTOM:

SEC. NO	C/L	A	B	C	T	WT. RANGE
1581	t6	62.00	29.50	23.80	0.80	2.450-2.650
1582	16	62.00	29.50	23.40	1.05	2.800-3.100
1583	16	62.00	29.50	23.80	1.50	4.500-4.900
1584	16	62.00	29.50	23.80	1.65	5.000-5.500
1585	16	62.00	29.50	23.80	2.00	5.300-5.800

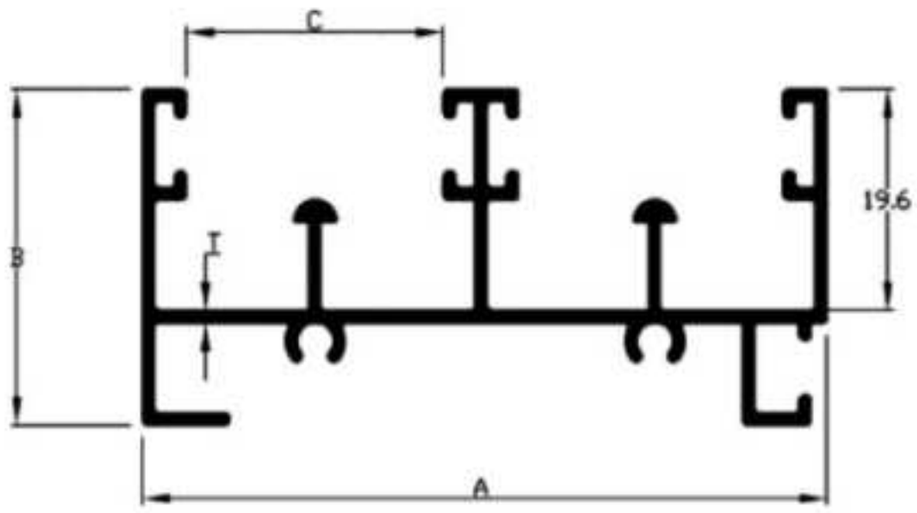

SEC.No.	C/L	T	WEIGHT
1822	12	2.00	3.400-3.800
1821	12	2.00	5.000-5.400

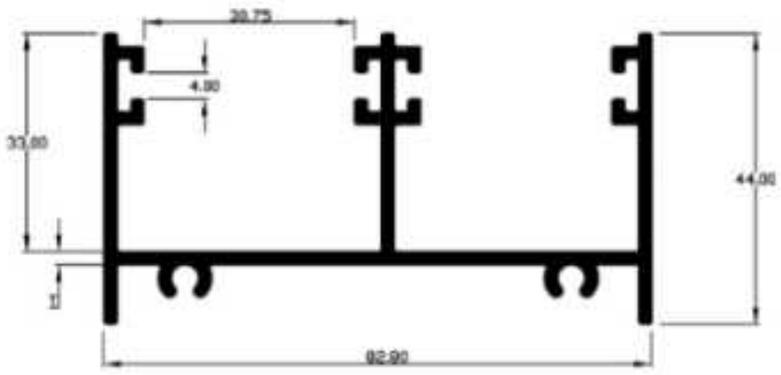

SEC.No.	C/L	T	WEIGHT
1832	12	1.40	4.600-5.000
1631	12	1.90	6.400-6.800

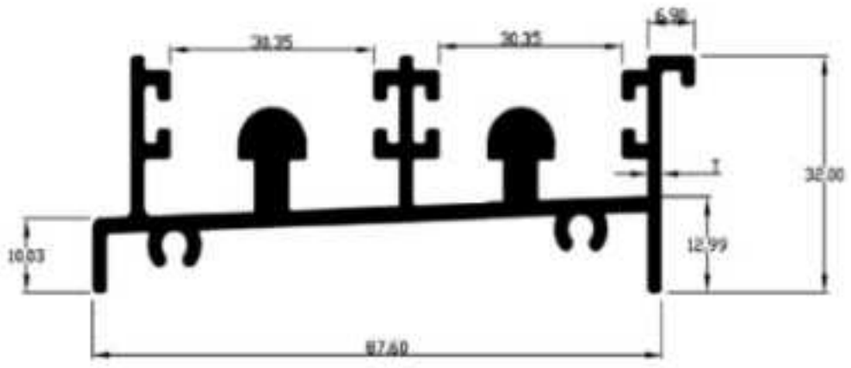

***ALL DIMENSION IN MM, CUT LENGTH IN FOOT AND WEIGHT RANGE IN KGS

VINCO ALUMINIUM PVT LTD

20MM THREE TRACK TOP:

SEC. NO	C/L	A	B	C	T	WT.RANGE
1600	16	92.00	29.50	23.50	0.72	3.100-3.400
1601	16	92.00	29.50	23.50	0.95	3.600-3.800
1603	16	92.00	29.50	22.70	1.10	4.100-4.400
1602	16	92.00	29.50	22.13	1.50	5.200-5.600

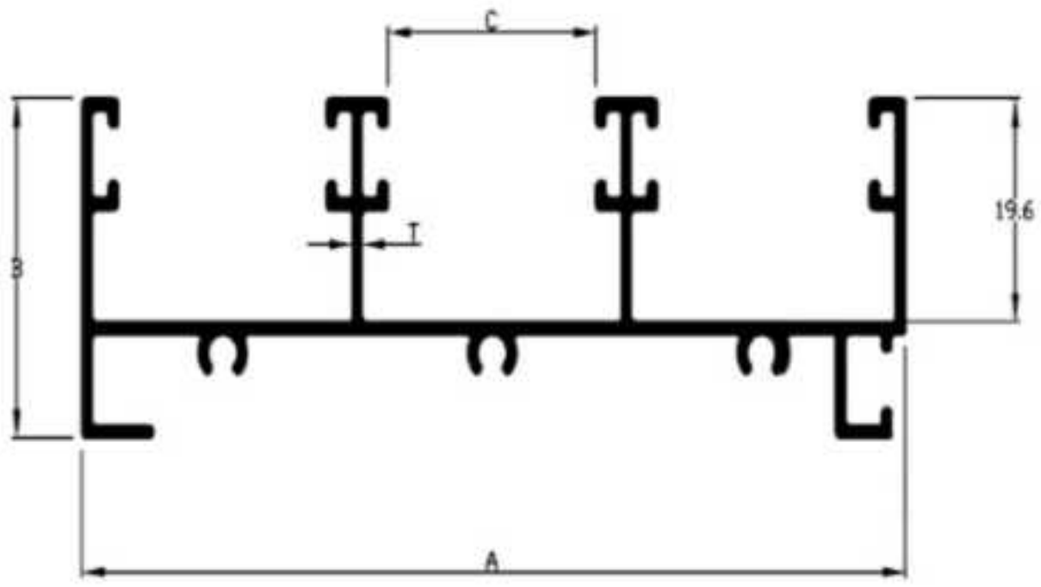

20MM THREE TRACK BOTTOM:

SEC.No.	C/L	A	B	C	T	WEIGHT
1620	16	92.00	29.50	23.50	0.70	3.300-3.800
1621	16	92.00	29.50	23.50	0.95	3.800-4.000
1623	16	92.00	29.50	22.70	1.10	4.400-4.700
1622	16	92.00	29.50	22.13	1.50	6.000-6.500

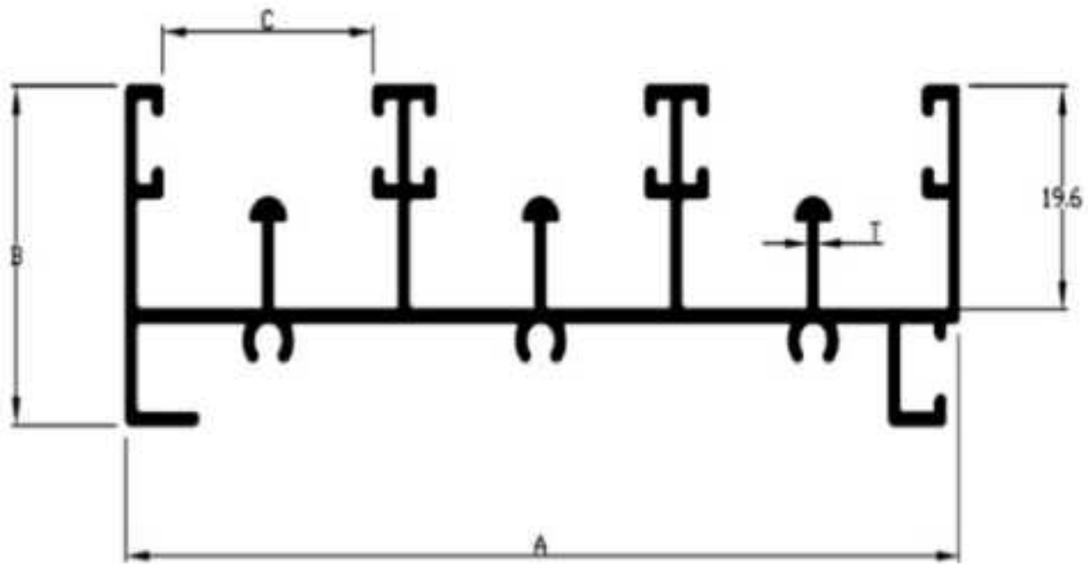

***ALL DIMENSION IN MM, CUT LENGTH IN FOOT AND WEIGHT RANGE IN KGS

VINCO ALUMINIUM PVT LTD

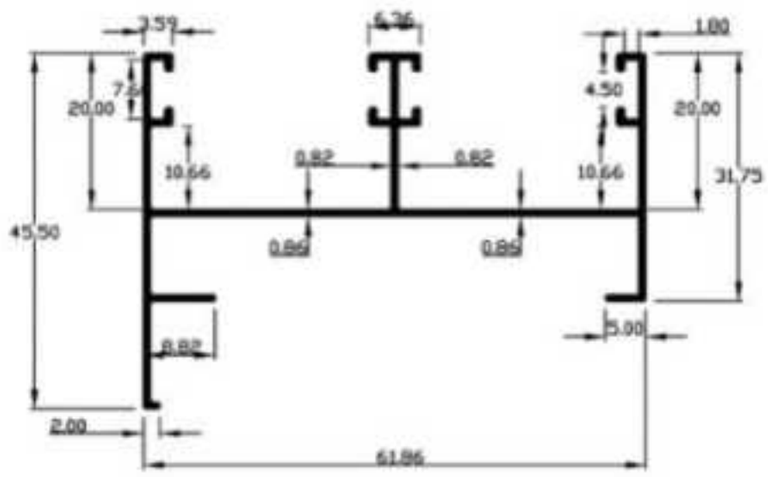

SEC. NO: — 1441

AREA: — 173.773 Sqmm
WEIGHT: — 1.717 kg/12'

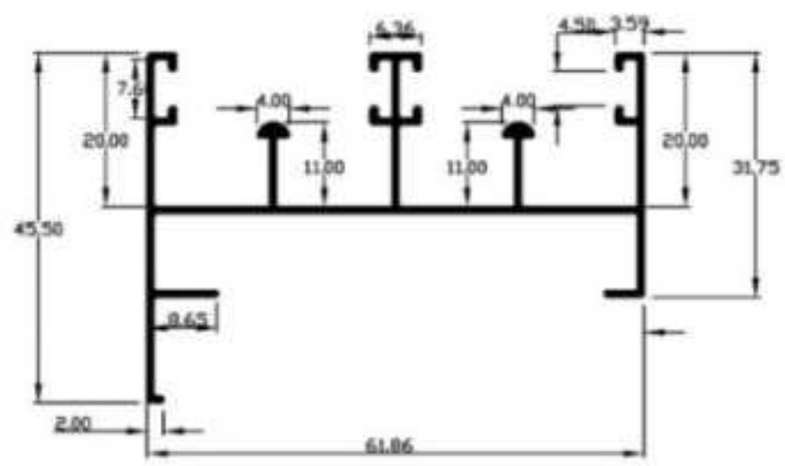

SEC N0:- 1446

ARE 201.398 Sqmm
WEIGHT: — 2.000 kg/12'

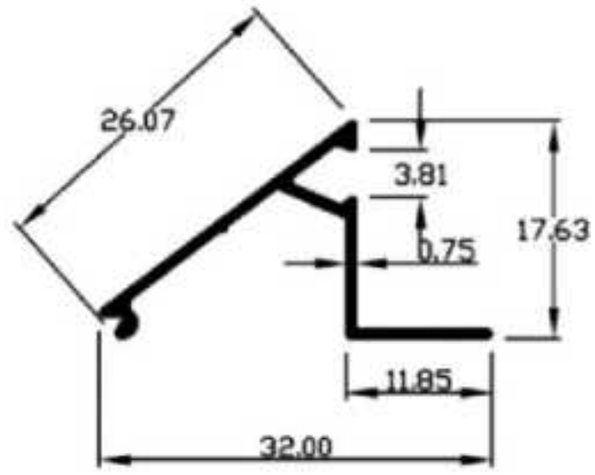

SEC.No.-2251
WEIGHT: —0. 450 —0.480 kg/12'

L .TUBE :

SEC.No.	C/L	A	B	T	WEIGHT
1891	12	38.00	24.50	0.B5	0.950-1.050
1892	12	38.00	24.50	0.90	1.050-1.150
1894	12	38.00	25.00	1.45	1.700-1.900
1893	12	50.00	25.00	1.10	1.300-1.500

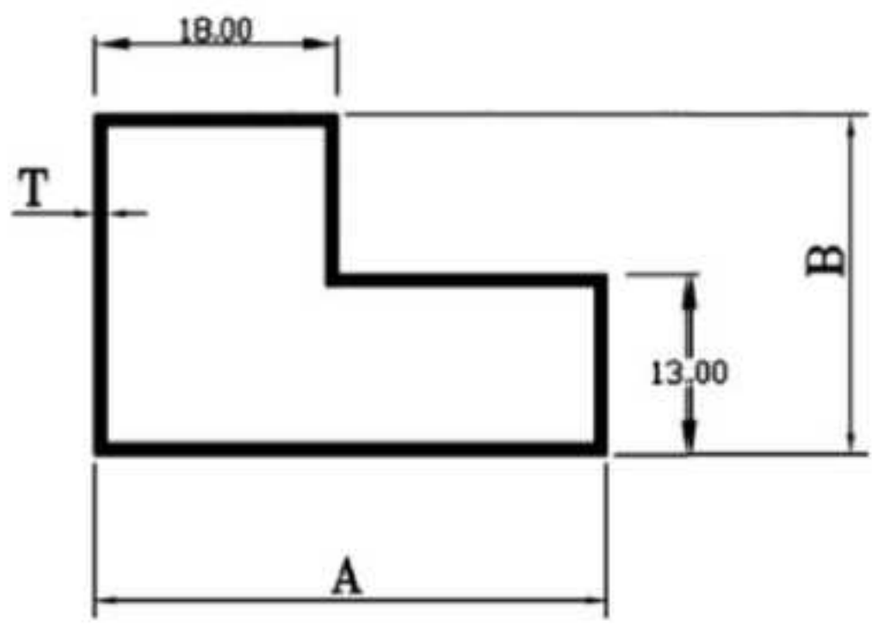

L .TUBE WITH GROOVE :

SEC.No.	C/L	A	B	T	WEIGHT
1901	12	45. 00	24. 00	0. 82	1, 100-1. 300
1902	12	45. 00	24. 00	1. 10	1. 500-1. 700
1903	12	45. 00	24. 00	1. 50	2. 000-2. 300

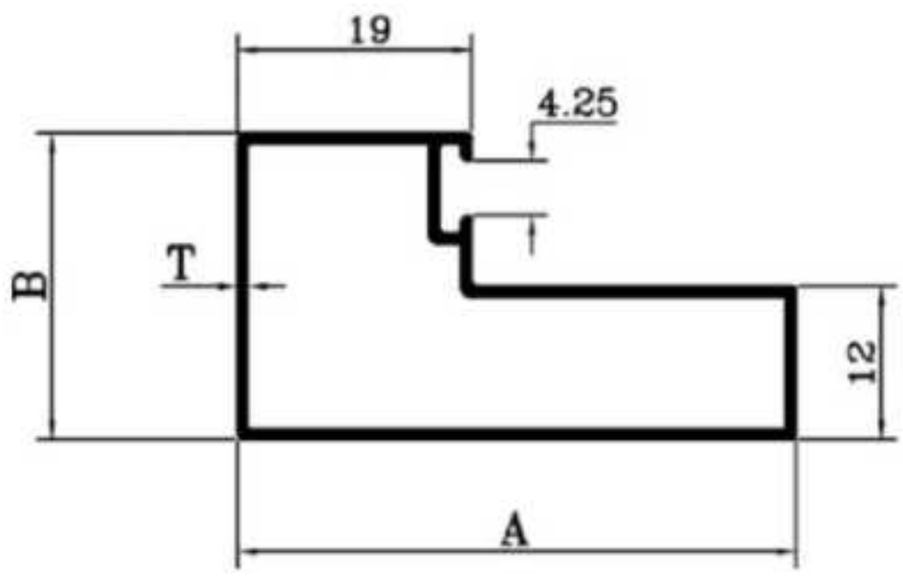

***ALL DIMENSION IN MM, CUT LENGTH IN FOOT AND WEIGHT RANGE IN KGS

VINCO ALUMINIUM PVT LTD

SEC.No.	A	B	T	Wt.(kg/12')
1966	42.00	31.00	1.20	1.500-1.800
1967	42.00	31.00	1.50	1.800-2.100

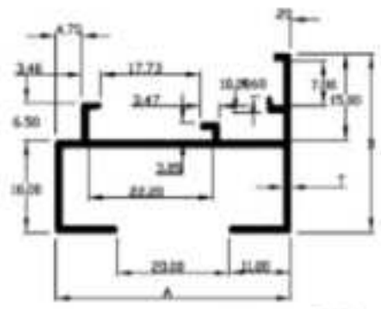

SEC.No.	A	B	T	Wt.(kg/12')
1971	42.00	31.20	1.20	2.200-2.400
1972	42.00	31.20	1.50	2.650-2.950

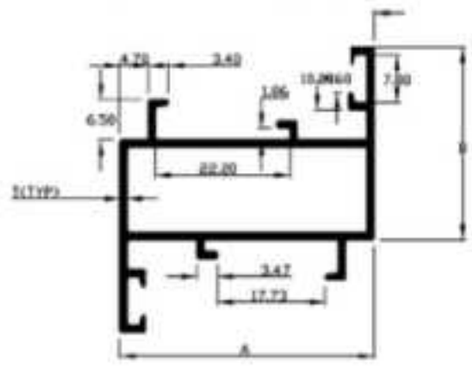

SGC.No.	A	B	I'	Tt.(kg/12')
1976	46.20	42.00	1.20	2.190-2.390
1977	46.20	42.00	1.50	2.650-2.950

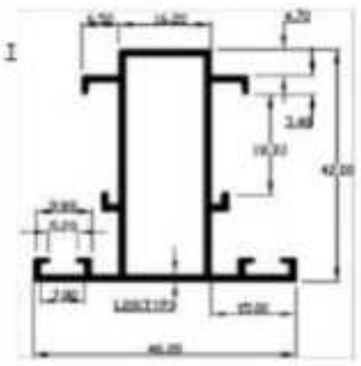

SEC.No.	A	B	T	6 €.(kg/12')
1981	27.80	15.00	1.05	0.770-0.870
1982	27.80	15.00	1.50	1.000-1.200

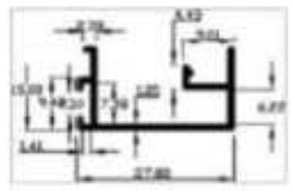

SEC.No.	C/L	T	WEIGHT
1857	12	1. 00	2. 500-2. 800
1856	12	1. 70	3. 200-3. 400

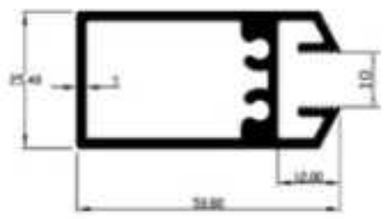

SEC.No.	C/L	T	WEIGHT
1862	12	1.30	3.100-3.300
1661	12	1.40	3.300-3.500

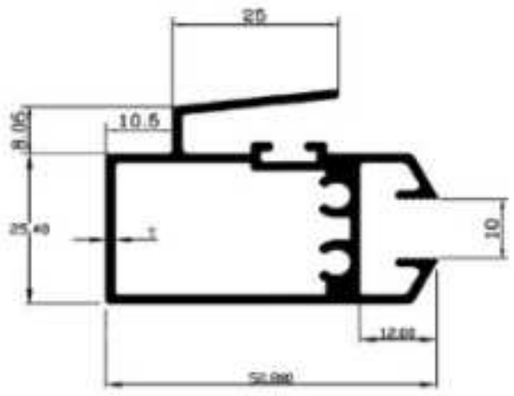

SEC.No.	C/L	T	WEIGHT
1867	12	1. 35	3. 000-3. 200
1866	12	1. 70	3. 500-3. 700

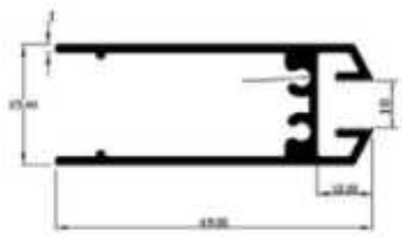

***ALL DIMENSION IN MM, CUT LENGTH IN FOOT AND WEIGHT RANGE IN KGS

VINCO ALUMINIUM PVT LTD

2 1/2 X 1 1/2 L-TUBE

SECNo — 1911

WEIGHT: — 4.000 kg/16'

SEC.No. — 1912

MOULDING CHOKHAT

WEIGHT:— 2.600-2.850 kg/16'

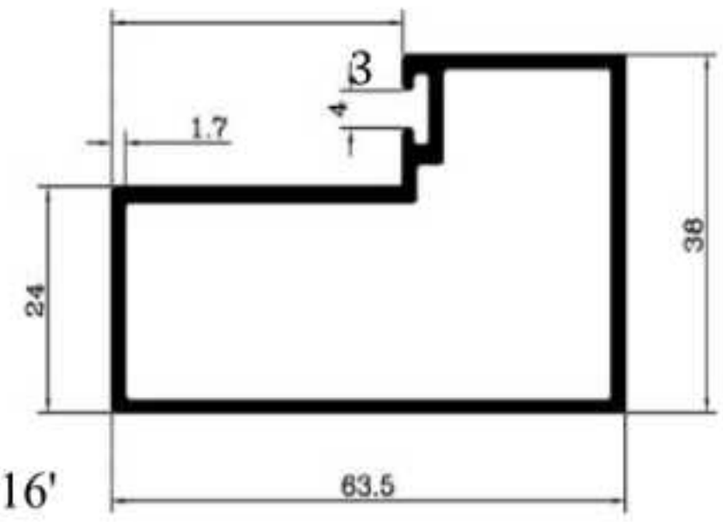

SEC.No. — 1913

CORNER PARTITION

WEIGHT: — 3.700-4.000 kg/16'

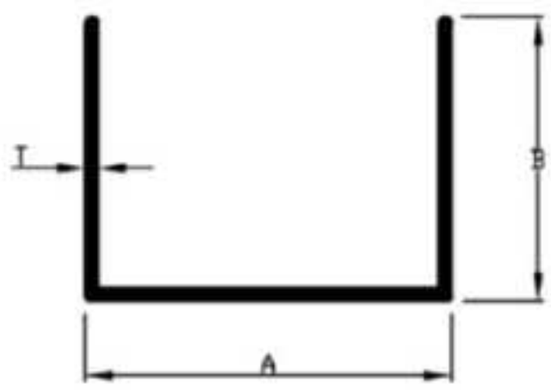

SINGLE GLASS CHANNEL

SEC.No.	C/L	A	B	T	WEIGHT
2301	12	9. 52	9. 52	0. 52	0. 140−0. 170
2302	12	9. 52	9. 52	0. 72	0. 180−0. 220
2303	12	12. 50	12. 50	0. 55	0. 180−0. 220
2306	12	12. 50	12. 50	0. 65	0. 220−0. 250
2304	12	28. 40	25. 00	1. 20	0. 900−9. 500
2305	12	33. 40	25. 00	1. 20	0. 950−1. 000

RECTANGULAR TUB ES:

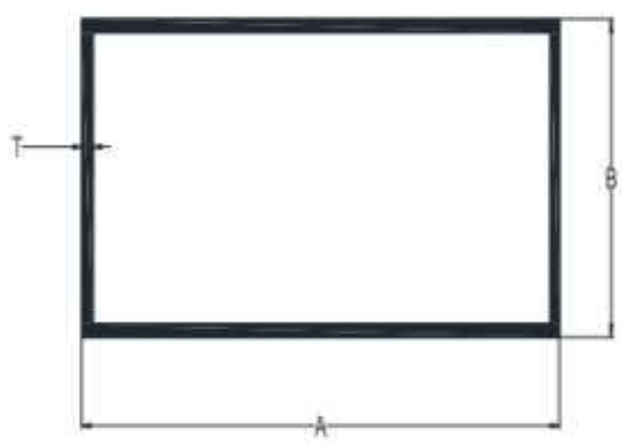

WEIGHT :
0.600 -6.000 KG/12'

SEC.No.	C/L	A	B	T	WEIGHT RANGE
1000	12	36.0	24.00	0.54	0.600-0.720
1001	12	36.0	24.00	0.69	0.750-0.850
1002	12	36.0	24.00	0.75	0.650-1.000
1003	12	36.0	24.00	0.86	1.000-1.300
1004	12	36.0	24.00	1.12	1.300-1.500
1025	12	36.0	24.00	1.55	1.700-2.000
1029	12	48.0	24.00	0.55	0.750-0.850
1005	12	48.0	24.00	0.67	0.900-1.200
1,006	12	48.0	24.00	0.86	1.200-1.400
1007	12	48.0	24.00	1.05	1.450-1.700
1009	12	48.0	24.00	1.25	1.700-1.900
1010	12	48.0	24.00	1.42	1.900-2.100
1011	12	48.0	24.00	1.60	2.200-2.400
1012	12	48.0	24.00	2.00	2.750-3.000
1013	12	63.0	38.00	0.78	1.500-1.800
1014	12	63.0	38.00	0.93	1.800-2.000
1015	12	63.0	38.00	1.46	2.600-3.000
1016	12	75.0	25.00	0.65	1.500-1.700
1017	12	100.0	25.00	1.00	2.400-2.600

SEC.No.	C/L	A	B	T	WEIGHT RANGE
1018	12	100.0	38.00	2.00	5.200-5.600
1019	12	101.6	44.45	1.15	3.200-3.500
1020	12	101.6	44.45	1.40	3.800-4.100
1021	12	100.0	38.00	1.05	2.700-3.000
1022	12	50.0	25.00	1.10	1.700-1.900
1023	12	63.0	38.00	1.10	2.500-2.800
1024	12	63.0	25.00	0.75	1.200-1.500
1028	12	75.0	25.00	1.50	2.850-3.200
1026	12	100.0	25.00	1.50	3.600-3.800
1027	12	100.0	19.00	1.70	3.800-4.100
1030	12	50.0	25.00	1.50	2.100-2.300
1031	12	100.0	50.00	2.00	5.750-6.000
1032	12	75.0	50.00	1.86	4.500-4.800
1033	12	100.0	50.00	1.70	4.900-5.2Q0
1034	12	75.0	38.00	2.00	4.300-4.600
1035	12	81.0	38.5	1.85	4.000-4.300
1036	12	50.0	38.00	1.30	2.150-2.400
1037	12	63.0	38.00	1.10	2.100-2.400
1038	12	50.0	38.00	1.90	3.200-3.500

WT. RANGE
2. 700−3. 000
3. 300−3. 500

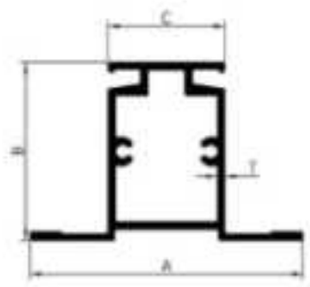

WT. RANGE
2.200-2.400

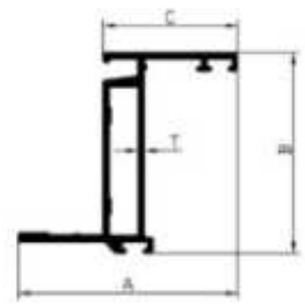

***ALL DIMENSION IN MM, CUT LENGTH IN FOOT AND WEIGHT RANGE IN KGS

VINCO ALUMINIUM PVT LTD

3/4" THREE TRACK TOP :

SEC.No.	C/L	A	B	C	T	WT. RANGE
1371	12	92.0	31.75	23.20	0.65	1.800-2.000
1372	12	92.0	31.75	23.20	0.72	2.000-2.200
1373	12	92.0	31.75	23.20	0.87	2.400-2.600
1374	12	92.0	31.75	23.20	0.98	2.700-3.000
1375	12	92.0	31.75	23.20	1.30	3.400-3.600
1376	12	92.0	31.75	23.20	1.50	3.700-3.900
1377	12	92.0	31.75	23.20	2.00	4.500-4.900

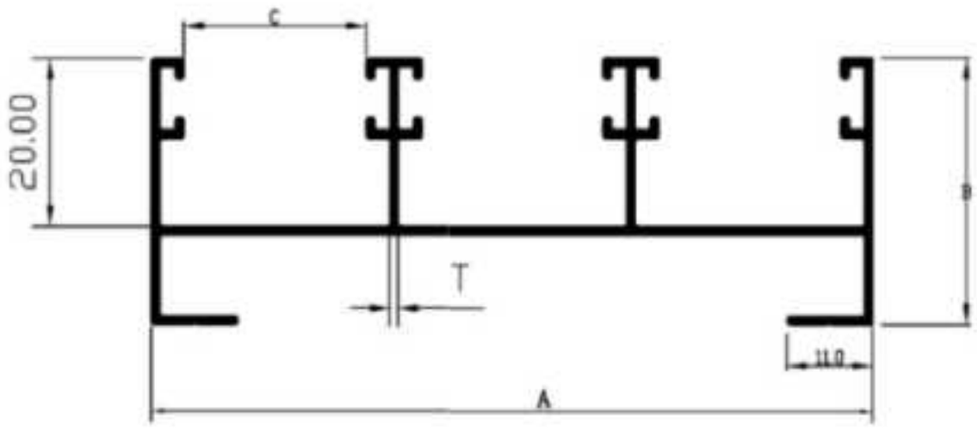

3/4" THREE TRACK BOTTOM :

SEC.No.	C/L	A	B	C	T	WT. RANGE
1391	12	92.00	31.75	24.50	0.75	2.500-2.750
1392	12	92.00	31.75	24.50	0.89	2.800-3.000
1393	12	92.00	31.75	24.50	1.10	3.200-3.400
1394	12	92.00	31.75	24.50	1.30	3.900-4.100
1395	12	92.00	31.75	24.50	1.50	4.500-4.700
1396	12	92.00	31.75	24.50	2.00	5.300-5.700

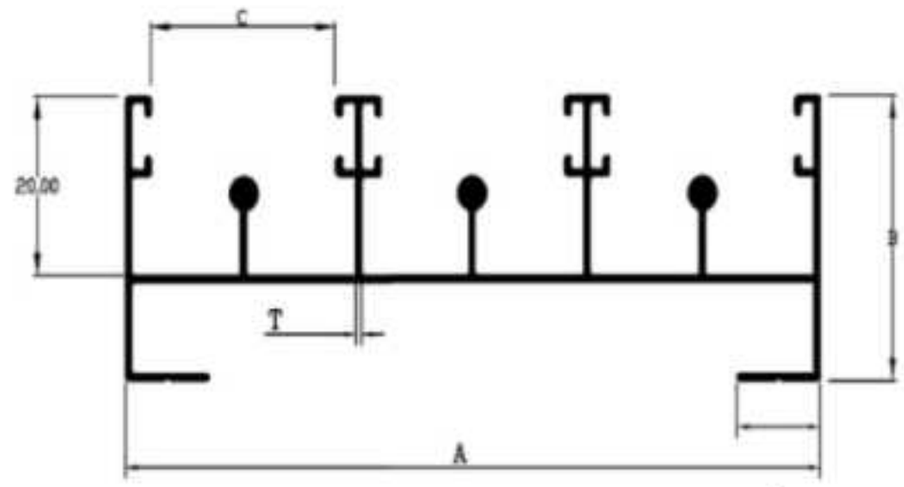

3/4" THREE TRACK BOTTOM HOLLOW :

SEC. NO: —1456

WEIGHT:- 5.000-5.400 kg/12

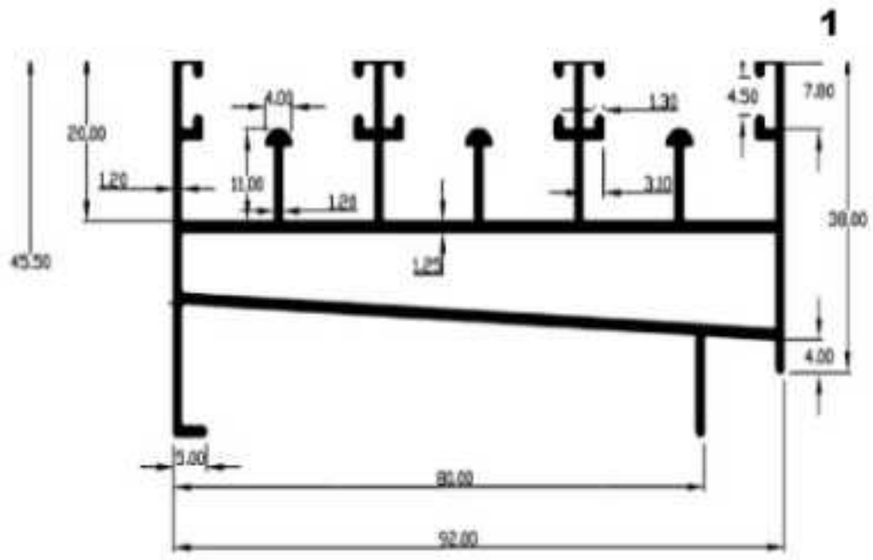

20MM FOUR TRACK TOP:

SEC. No.	C/L	A	B	C	T	WEIGHT
1631	16	123.0	30.00	23.35	1.27	5.650-5.850

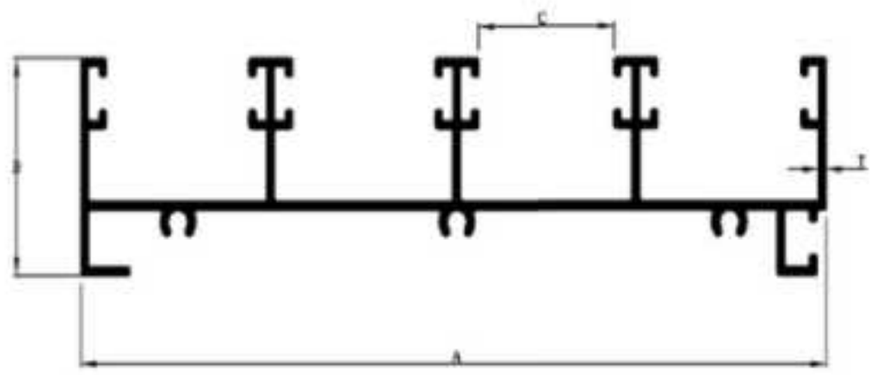

20MM FOUR TRACK BOTTOM:

SEC.No.	C/L	A	B	C	T	WEIGHT
1636	16	123.0	30.00	30.45	1.27	6.550-6.750

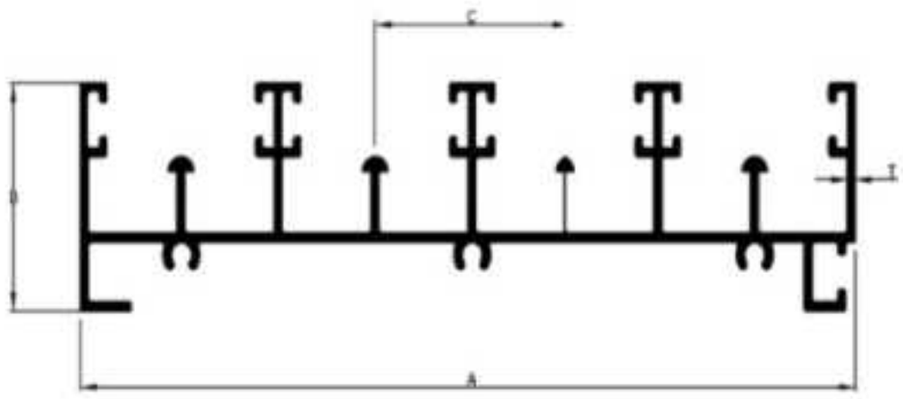

***ALL DIMENSION IN MM, CUT LENGTH IN FOOT AND WEIGHT RANGE IN KGS

VINCO ALUMINIUM PVT LTD

1" TWO TRACK TOP:

SEC. NO	C/L	A	B	C	T	WT.RANGE
1672	12	75.00	25.00	28.20	2.00	3.300-3.500

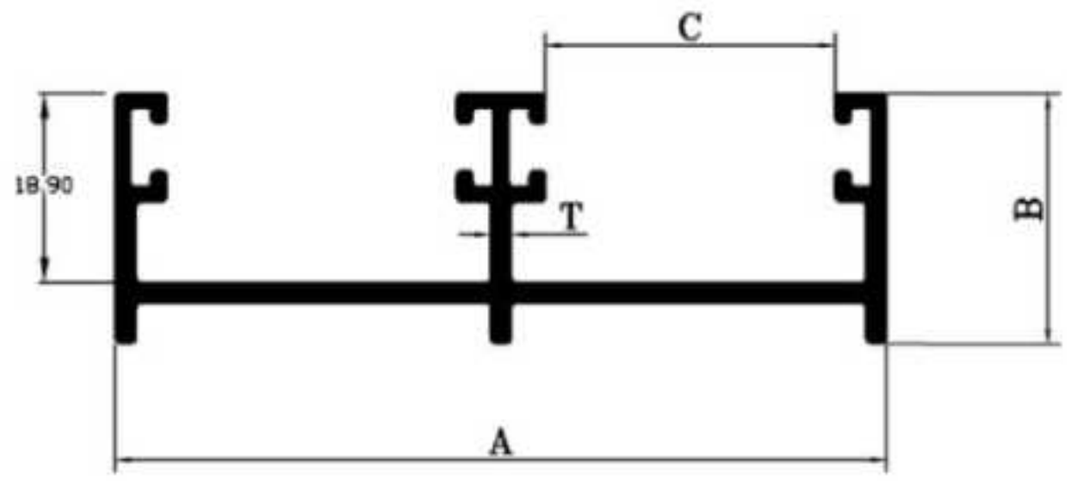

1" TWO TRACK BOTTOM:

SEC.No.	C/L	A	B	C	T	WT.RANGE
1681	12	75.00	25.00	28.20	2.00	3.800-4.000

1" TWO TRACK BOTTOM HOLLOW:

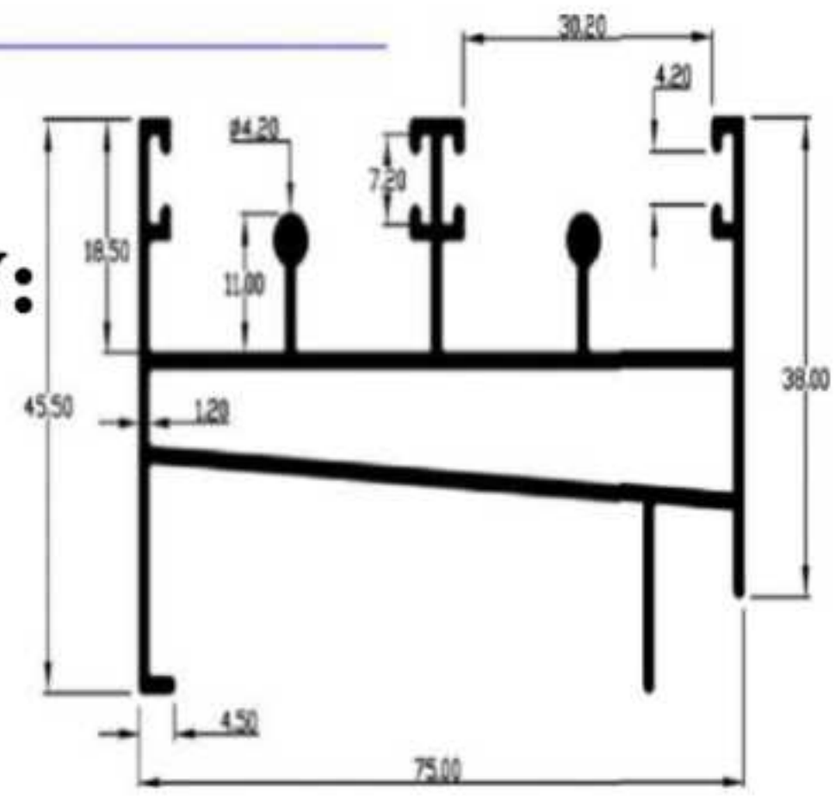

1" TW0 TRACK BOHOM HOLLOW

SEC. NO: — 1691

WEIGHT: 4.000-4.300 kg/12'

***ALL DIMENSION IN MM, CUT LENGTH IN FOOT AND WEIGHT RANGE IN KGS

VINCO ALUMINIUM PVT LTD

1" THREE TRACK TOP:

SEC. NO	A	A	B	C	T	WEIGHT
1702	12.0	116.0	25.00	29.70	1.45	3.700-4.000
1701	12.0	116.0	25.00	29.70	2.00	4.700-5.000

1" THREE TRACK BOTTOM:

SEC. NO	C/L	A	B	C	T	WEIGHT
1712	12	116.0	25.00	29.60	1.47	4.500-4.800
1711	12	116.0	25.00	29.60	2.00	5.500-5,B00

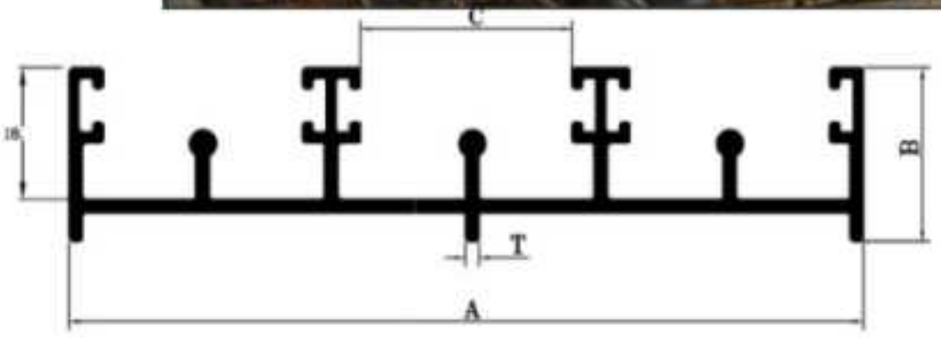

1" THREE TRACK BOTTOM HOLLOW:

SEC. NO: — 1721
WEIGHT: 5.800-6.200 kg/12'

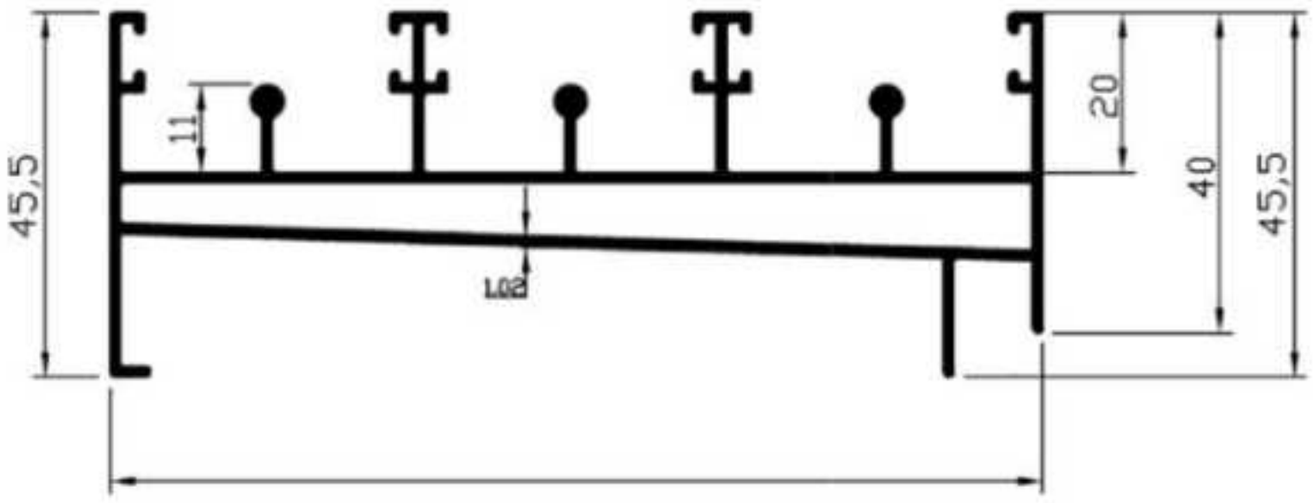

SECNo — 1876
60 X 18 HAEDLE
WEIGHT: — 2.000 kg/12'

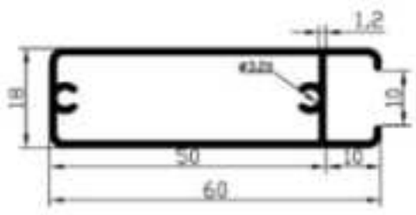

SEC NO:—1946
WEIGHT: — 2.100 —8.400 kg/12'

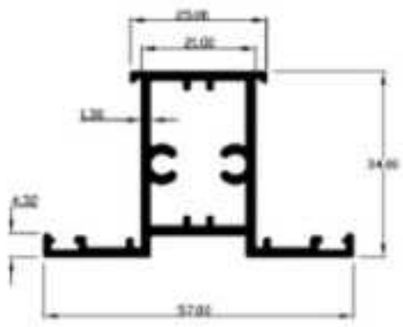

SEC.No. — 1881
60 X 18 INTERLOCK
WEIGHT:— 2.350 kg/12'

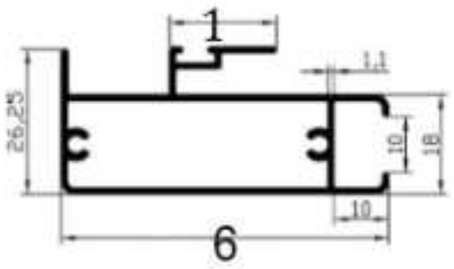

SEC NO:— 1956
WEIGHT: — 1.500 —1.800 kg/18

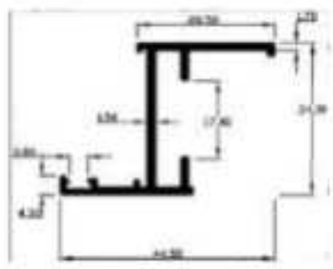

SEC.No. — 1886
60 X 18 TOP BOTTOM
WEIGHT: — 2.000 kg/12'

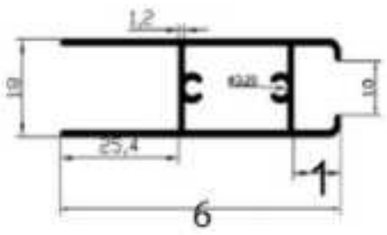

SEC. NO: — 1961
WEIGHT:- 0650-0700 kg/12'

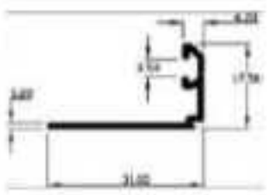

***ALL DIMENSION IN MM, CUT LENGTH IN FOOT AND WEIGHT RANGE IN KGS

VINCO ALUMINIUM PVT LTD

3/4" TOP BOTTOM :

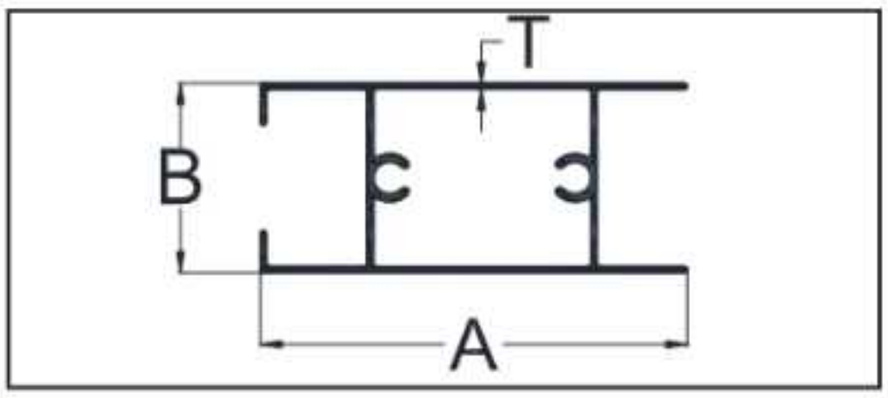

SECNo.	C/L	A	B	T	WT. RANGE
1511	16	40.00	18.00	0.70	1.300-1.450
1512	16	40.00	18.00	0.87	1.700-1850
1513	16	40.00	18.00	1.50	2,600-2.800
1514	16	40.00	18.00	1.80	3.000-3.300

3/4" TOP BOTTOM :

SECNo.	C/L	A	B	T	WT. RANGE
1783	15	50.00	25.40	0.82	1.700-2.000
1781	15	50.00	25.00	0.85	1.800-2.100
1782	15	50.00	25.00	1.00	2.200-2.500
17B0	15	45.00	25.00	1.10	2.300-2.500

3/4" BEARING BOTTOM :

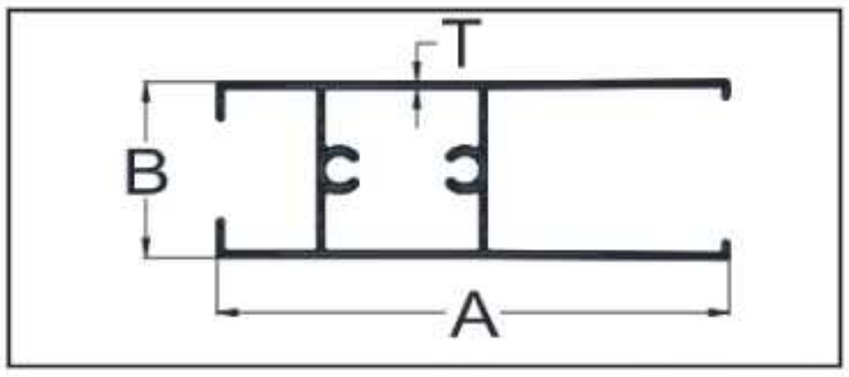

SECNo.	C/L	A	B	T	WT. RANGE
1530	12	52.00	18.00	0.70	1.100-1.400
1531	12	52.00	18.00	0.90	1.400-1.600

3/4" BEARING BOTTOM :

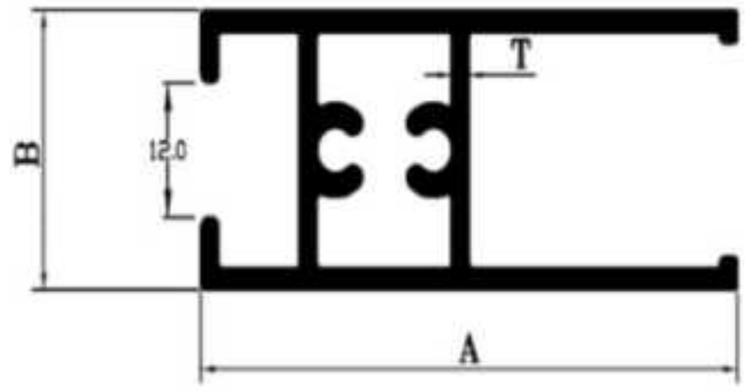

SECNo.	C/L	A	B	T	WT. RANGE
1791	12	60.00	25.00	1.01	2.400-2.600
1792	12	60.00	25.00	1.32	2.600-2.800
1793	12	60.00	25.00	2.00	3.800-4.100

3/4" MATTING :

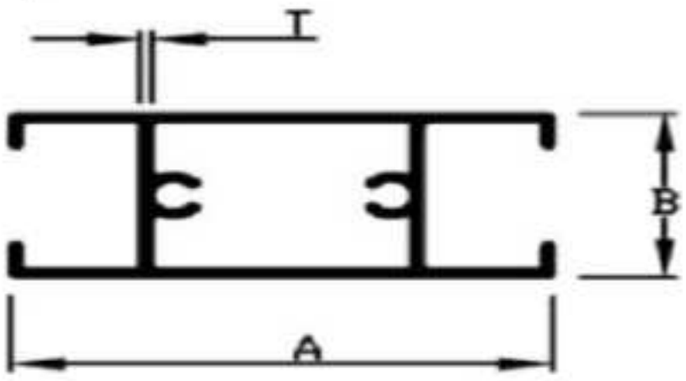

SECNo.	C/L	A	B	T	WT. RANGE
1540	16	42	18	0.75	1.500-1.600
1542	12	42	18	0.9	1.050-1.250
1541	12	42	18	1.16	1.500-1.700

3/4" MATTING :

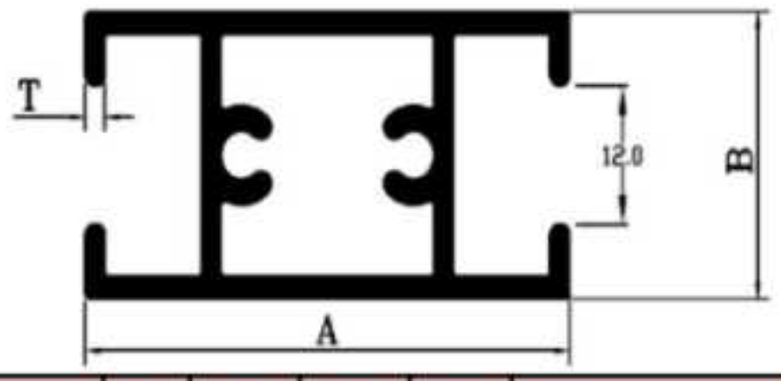

SECNo.	C/L	A	B	T	WT. RANGE
1801	12	50.00	25.00	0.85	1.600-1.800
1802	12	50.00	25.00	1.10	1.900-2.150
1803	12	50.00	25.00	1.30	2.300-2.500
1804	12	50.00	25.00	1.50	2.700-2.900
1805	12	50.00	25.00	2.00	3.500-3.750

***ALL DIMENSION IN MM, CUT LENGTH IN FOOT AND WEIGHT RANGE IN KGS

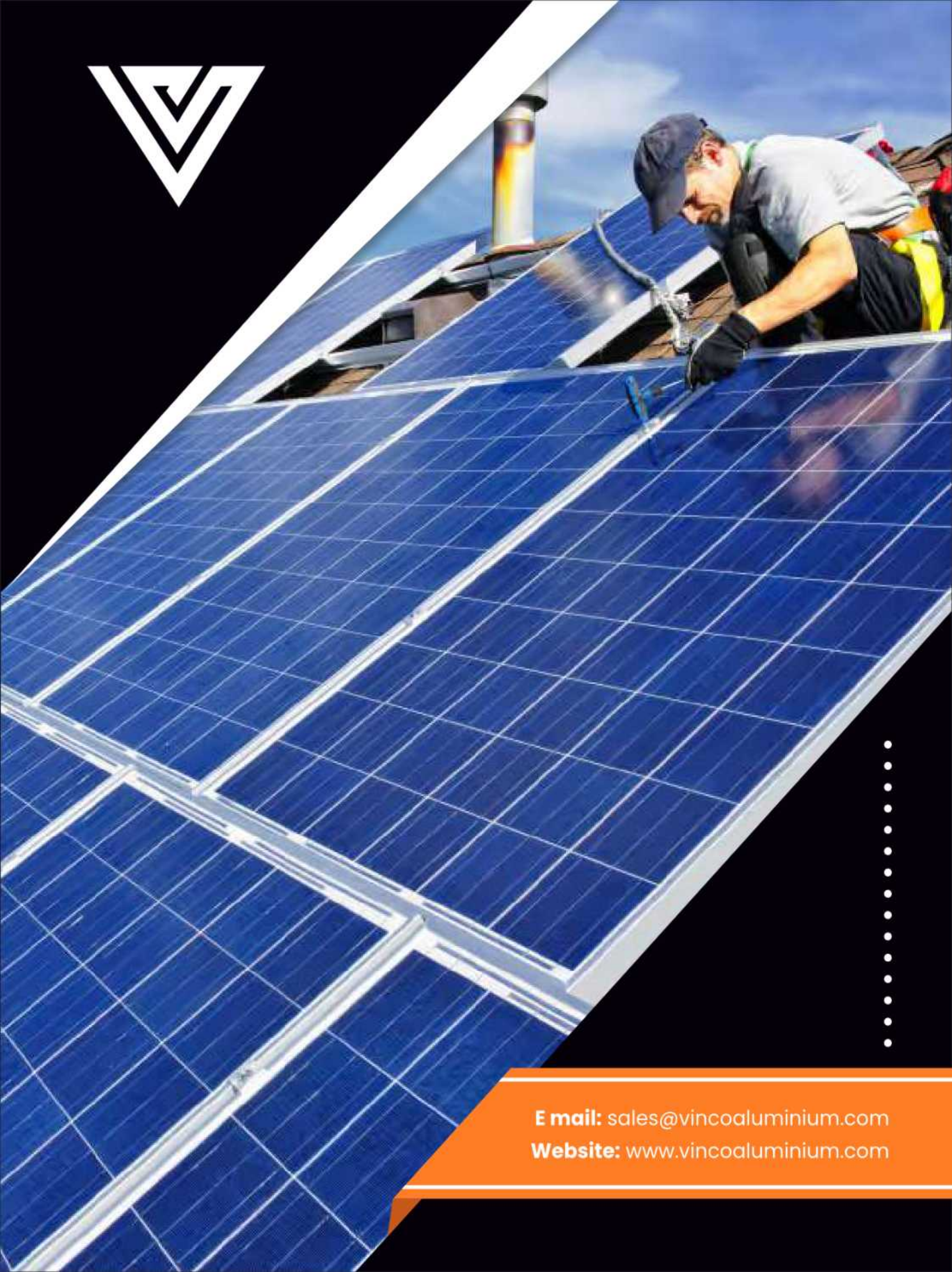

E mail: sales@vincoaluminium.com
Website: www.vincoaluminium.com